Seat No.: _____ Enrolment No._____

GUJARAT TECHNOLOGICAL UNIVERSITY

BE/PDDC- SEMESTER– 1st / 2nd • EXAMINATION – SUMMER 2016

Subject Code: 110010 **Date: 10/06/2016**

Subject Name: Mechanics of Solids

Time: 2: 30 PM to 5:00 PM **Total Marks: 70**

Instructions:

1. **Attempt any five questions.**
2. **Make suitable assumptions wherever necessary.**
3. **Figures to the right indicate full marks.**

Q.1	**(a)**	Explain in brief (i) Resultant of a force system (ii) Law of Parallelogram (iii) Lami's theorem	**07**
	(b)	A force system is shown in *Figure No.01*, Find the resultant of the system and check the answer by law of Polygon.	**07**
Q.2	**(a)**	(i) State Varigon's theorem and give the application of theorem	**03**
		(ii) State the conditions of equilibrium for different types of force systems.	**04**
	(b)	Two buckets are suspended by a flexible wire as shown in *Figure No.02*. The weight of bucket is *B 200 N*, if the system is in equilibrium, find the weight of bucket *A* and force in each part of the wire. Neglect self weight of wire.	**07**
Q.3	**(a)**	Find the resultant of a non- concurrent coplanar force system shown in *Figure No.3* and locate the resultant with respect to point *A*.	**07**
	(b)	A beam is loaded as shown in *Figure No. 04*, Find the reactions at supports for beam.	**07**
Q.4	**(a)**	A beam is loaded as shown in *Figure No. 05*, Find the reactions at Support and draw the shear force and bending moment diagram for the beam, Also determine the maximum bending moment.	**07**
	(b)	A composite stepped bar made of Brass and Steel as shown in *Figure No. 06*, is subjected to various loads is in equilibrium, Find the unknown force P and total change in length of the bar.	**07**
Q.5	**(a)**	Locate the centroid of a plain lamina shown in *Figure no. 07.*	**07**
	(b)	Determine moment of inertia of section shown in *Figure No.8* about centroidal axes (X and Y both)	**07**
Q.6	**(a)**	State and explain with figure Pappu's –Guildinu's theorem of surface area of Revolution	**07**
	(b)	Draw the shear stress distribution diagram over the section shown in *Figure No. 08* if it is subjected to maximum shear force of 100 kN.	**07**
Q.7	**(a)**	A uniform ladder of weight 400 N and length *6* m is placed against a smooth vertical wall such that it makes an inclination of 60° with floor. A person of weight 800 N climbs the ladder. At what position of the person the ladder will start to slip. Take coefficient of friction between floor and ladder is 0.25.	**07**

(b) At a point in a strained material two mutually perpendicular tensile stress of 5 N/mm^2 and 8 N/mm^2 and shear stress 2 N/mm^2 are acting as shown in *Figure No. 09*. Find the values of principal stresses and position of principal planes. **07**

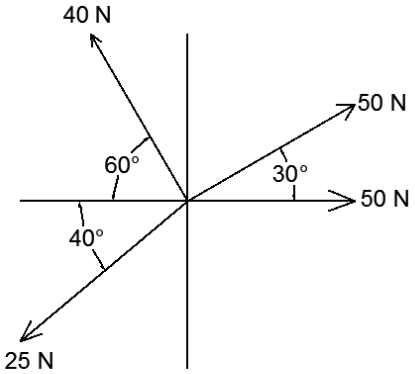

Figure No 01, Q-1 (b)

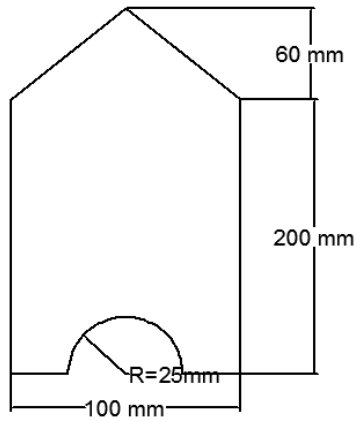

Figure No 07, Q-5 (a)

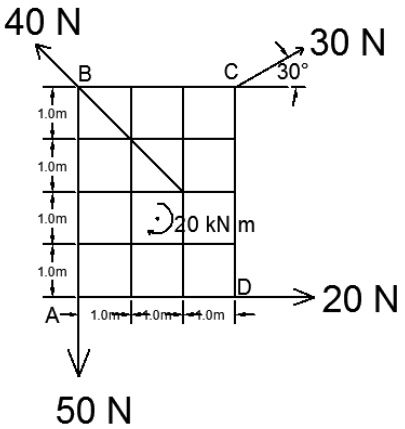

Figure No 03, Q-3 (a)

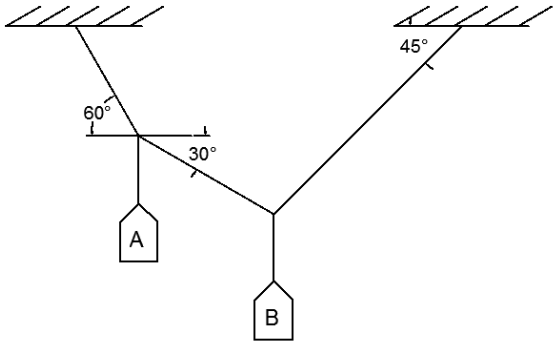

Figure No 02, Q-2 (b)

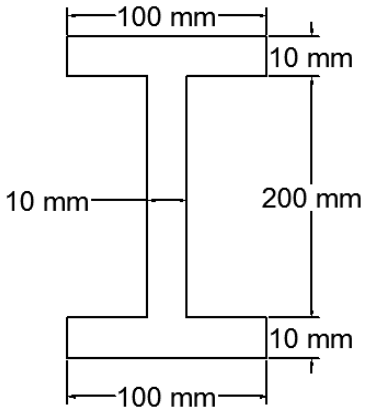

Figure No 08, Q-5 (b)

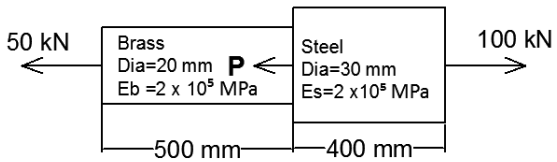

Figure No 06, Q-4 (b)

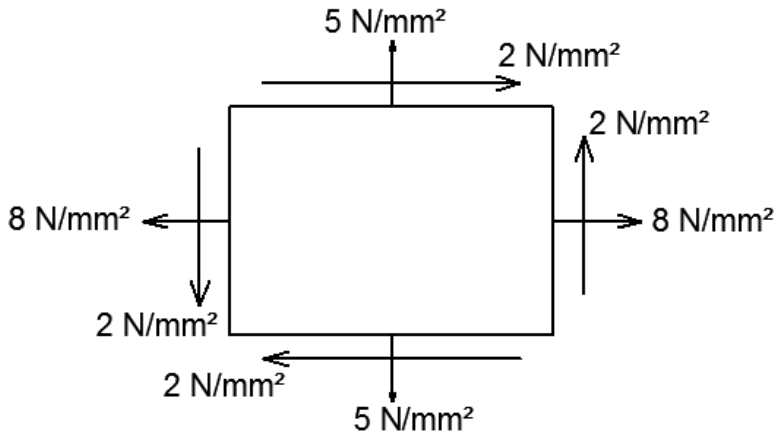

Figure No 09, Q-7 (b)

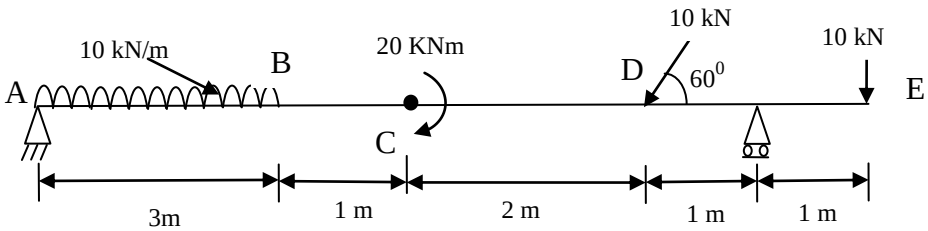

Figure No-4 Q-3 (b)

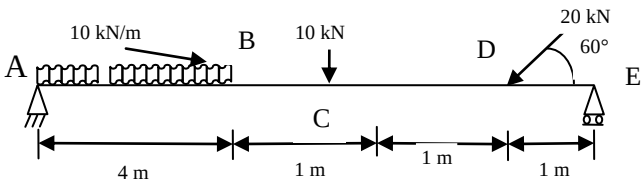

Figure No-5 Q-4 (a)