Seat No.: _____ **Enrolment No._____**

GUJARAT TECHNOLOGICAL UNIVERSITY

BE - SEMESTER–V- EXAMINATION – SUMMER 2016

Subject Code: 150103 **Date: 09/05/2016**

Subject Name: Aircraft Structure-II

Time: 02:30 PM to 05:00 PM **Total Marks: 70**

Instructions:

1. **Attempt all questions.**
2. **Make suitable assumptions wherever necessary.**
3. **Figures to the right indicate full marks.**

Q.1		Define the following terms by giving suitable example or sketch:	**14**
	(a)	Unsymmetrical bending	**02**
	(b)	Shear center.	**02**
	(c)	Principal Centroidal axis.	**02**
	(d)	Stiffness and Flexibility.	**02**
	(e)	Complimentary strain energy.	**02**
	(f)	Redundant.	**02**
	(g)	Isotropic Material.	**02**
Q.2	**(a)**	Explain Flight Envelope (V-n diagram) with the help of sketch.	**07**
	(b)	Locate the Shear Centre of a section as shown in fig.-4. Also draw the shear flow and shear stress distribution diagram.	**07**
		OR	
	(b)	For a section as shown in fig.-1, locate the neutral axis, the principal centroidal axis.	**07**
Q.3		At a point in a body subjected to a three dimensional forces, the state of stress is define as σ_{xx} = 100 N/mm^2, σ_{yy} = -50 N/mm^2 , σ_{zz} = -50 N/mm^2 and the shear stresses T_{xy}= T_{yz}= T_{zx}= 75 N/mm^2. Compute the normal, Shearing and Resultant stresses on a plane having direction cosine: a-) l= 45°, m= 30°, n=0°. b-) l= m=n.	**14**
		OR	
Q.3	**(a)**	Explain the criteria for obtaining the redundant structure for the analysis of indeterminate structure by giving suitable example.	**06**
	(b)	State the difference between Stiffness Matrix Method and Flexibility Matrix Method of Structural Analysis	**04**
	(c)	State the difference between determinate and indeterminate structure w.r.t. 1-) Analysis and 2-) Stability	**04**
Q.4		Analyze the beam as shown in fig.-5 using Flexibility Matrix Method. Take EI = 3 x 10^7 kN-m^2. Also plot Shear force and bending moment diagram.	**14**
		OR	
Q.4		Analyze the beam as shown in fig.-5 using Stiffness matrix Method. Take EI = 3 x 10^7 kN-m^2. Also plot Shear force and bending moment diagram.	**14**
Q.5	**(a)**	A propped cantilever beam of 5 m length is subjected to u.d.l. of 30 kN/m throughout the span. Find the support reaction using Theorem of Least Work. Also plot bending moment diagram. Take EI = 3 x 10^7 kN-m^2.	**07**
	(b)	Find the internal forces in a truss member as shown in fig.2 by using any suitable method of energy approach. Consider cross-section area of all truss member A=10000 mm^2 and E=200kN/mm^2.	**07**
		OR	
Q.5	**(a)**	A two span continuous beam of 6 m each is subjected to u.d.l of 20 kN/m	**09**

throughout the span. Find the support reaction using Unit load Method. Also plot shear force and bending moment diagram.

(b) Enlist the steps of Unit load Method to be followed for the analysis of plane truss. **05**

****

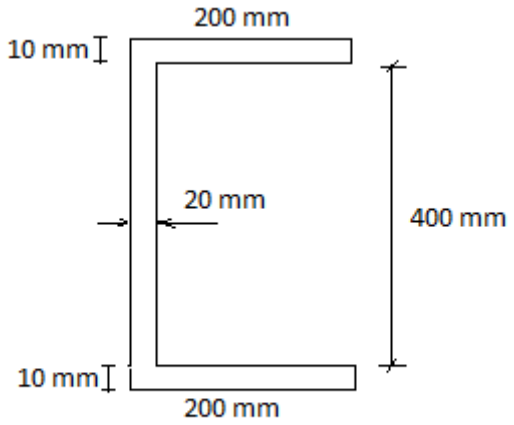

Fig.-1

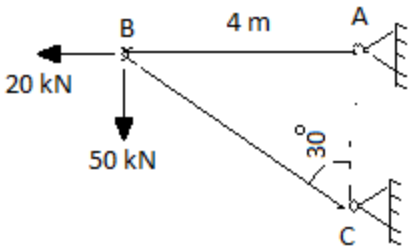

Fig.-2

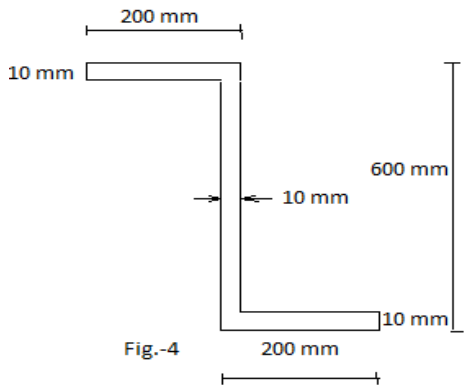

Fig.-4

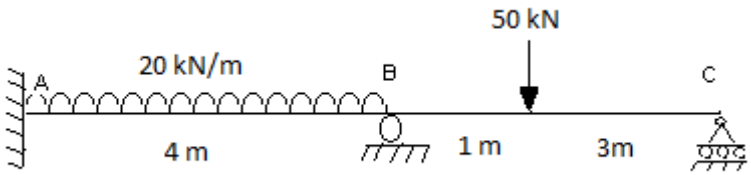

Fig-5