Seat No.: _____ **Enrolment No._____**

GUJARAT TECHNOLOGICAL UNIVERSITY

BE - SEMESTER–VI- EXAMINATION – SUMMER 2016

Subject Code:161905 **Date:11/05/2016**

Subject Name:Control Engineering

Time: 10:30 AM to 01:00 PM **Total Marks: 70**

Instructions:

1. **Attempt all questions.**
2. **Make suitable assumptions wherever necessary.**
3. **Figures to the right indicate full marks.**

Q.1 **(a)** Explain the open-loop operation of traffic signals at a road crossing. How can improved traffic control be achieved by means of a closed-loop scheme? What are the advantages and disadvantages of open loop and closed loop systems? **07**

(b) Justify the following statements if true: **07**

(1) Feedback control systems are also referred to as closed–loop systems.

(2) Fixed-time traffic light control system is an example of closed loop control system.

(3) In a multivariable control system there is one input variable but variable outputs.

Q.2 **(a)** What is mathematical modeling? Explain the steps for mathematical modeling of any physical system. **07**

(b) What is modern control theory? Compare modern control theory with conventional control theory. Classify different types of control problems. **07**

OR

(b) What is servo mechanism? Explain how it can be best applied for automation control? Explain servo mechanism in CNC machines. **07**

Q.3 **(a)** What is system analogy? Describe analogy between following systems **07**

- Translational mechanical and Rotational mechanical systems.
- Force and Voltage system.
- Force and current system

(b) What is Transfer function? Obtain the transfer function of a liquid level system. Explain resistance and capacitance of any liquid level system. **07**

OR

Q.3 **(a)** What is a signal flow graph? What are Properties of signal flow graph? State and explain Mason's gain formula for signal flow graph. **07**

(b) Find the input–output transfer function T=Y/U of the system by reducing the following block diagram **07**

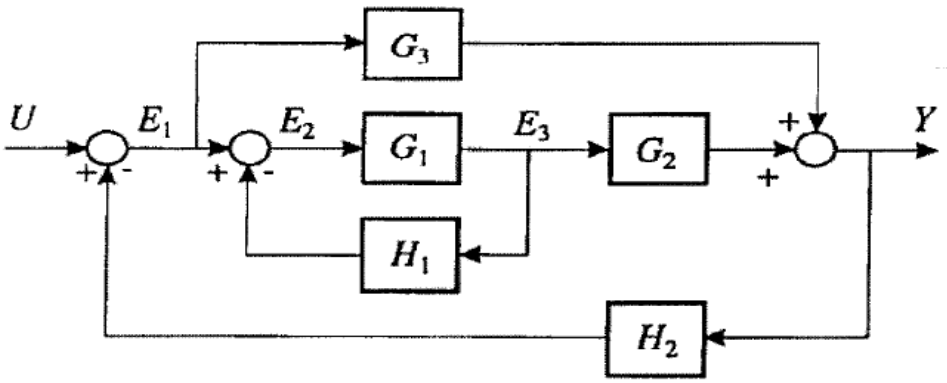

Fig 1

Q.4 **(a)** Use Mason's gain formula for finding the input-output T=Y/U gain of given block diagram **07**

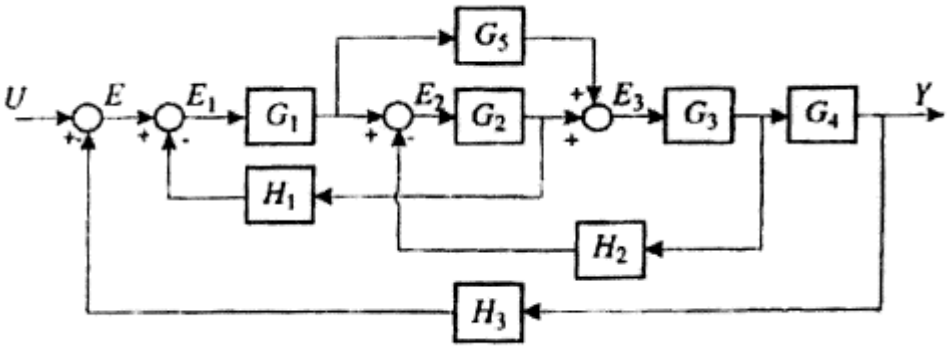

(b) Write short note on : control systems for thermal power plant **07**

OR

Q.4 **(a)** Compare hydraulic control system with pneumatic control system in detail. State the different applications of pneumatic control system. **07**

(b) List the basic types of control actions and explain the PDI control action in detail. **07**

Q.5 **(a)** Explain the transient response of second order system. **07**

(b) What do you mean by stability of a control system? Explain Routh's stability criterion. **07**

OR

Q.5 **(a)** Describe working of hydraulic proportional plus derivative controller and derive expression for its performance. **07**

(b) Define programmable logic controller. What are the components of PLC? State the Advantages & Disadvantages of it. **07**

****