Seat No.: _____ Enrolment No._____

GUJARAT TECHNOLOGICAL UNIVERSITY

BE - SEMESTER–VII EXAMINATION – SUMMER 2016

Subject Code:171702 **Date:07/05/2016**

Subject Name:Programmable Automation Controller

Time:02:30 PM to 05:00 PM **Total Marks: 70**

Instructions:

1. **Attempt all questions.**
2. **Make suitable assumptions wherever necessary.**
3. **Figures to the right indicate full marks.**

Q.1	**(a)**	What is input module? Explain input module of PLC using suitable block diagram.	**07**
	(b)	With neat diagram explain PLC Scanning in detail.	**07**
Q.2	**(a)**	Draw a block diagram of a PLC showing the main functional items and how buses link them, explaining the functions of each block.	**07**
	(b)	Draw the ladder programs for the following. F(a,b,c,d) = Σ(0,1,2,4,5,7,8,10,12,13,14)	**07**
		OR	
	(b)	Draw the ladder programs for the following. F(w,x,y,z,) = Π(0,1,2,5,8,9,10)	**07**
Q.3	**(a)**	Explain arithmetic functions of PLC.	**07**
	(b)	Discuss various factors to be considered in selecting PLC.	**07**
		OR	
Q.3	**(a)**	Describe PID function of PLC in detail.	**07**
	(b)	Develop ladder diagram to convert temperature reading from Celsius to Fahrenheit.	**07**
Q.4	**(a)**	Explain Retentive On Delay timer instruction using timing diagram and suitable example.	**07**
	(b)	Prepare ladder diagram program for following application: An automatic car parking system, when the parking area is full with 10 cars the red bulb at entry should 'ON' to indicates it is full. If the number of cars within the parking area is less than 10 the green bulb should 'ON' to indicate that the space for parking is available.	**07**
		OR	
Q.4	**(a)**	Describe the different counter function in PLC.	**07**
	(b)	Design and draw ladder diagram to generate square wave at digital output terminal with ON time of 5 seconds and OFF time of 10 seconds when toggle switch is ON.	**07**
Q.5	**(a)**	Describe the shift register applications.	**07**
	(b)	Create the PLC system for given system. A part is placed on a conveyor. The part automatically moves down the conveyor. In the middle of the conveyor, the part goes through a 2-foot-long painting section. The sprayer points for the time the part is under the booth, during which time the conveyor does not stop. When the part reaches the end of the conveyor, the conveyor stops and part removes. Add limit switches, interlocks, pushbuttons, and other devices required	**07**
		OR	
Q.5	**(a)**	Describe the operation of SKIP and MASTER CONTROL RELAY function.	**07**

(b) An industrial type robot is shown in below figure. The robot used for illustration starts operating from lower left, initialized position. The operation is: **07**

→Arm is initially in the down-left position as shown. Gripper is open and not extended → Arm moves to upper position→Arm rotates to right →Hand extends to position A-Gripper closes, Gripping part →Arm swings back to the left to position B → Gripper opens, releasing part- Hand retracts →Arm lowers to the initial position. Design the PLC based Automation for this robot.

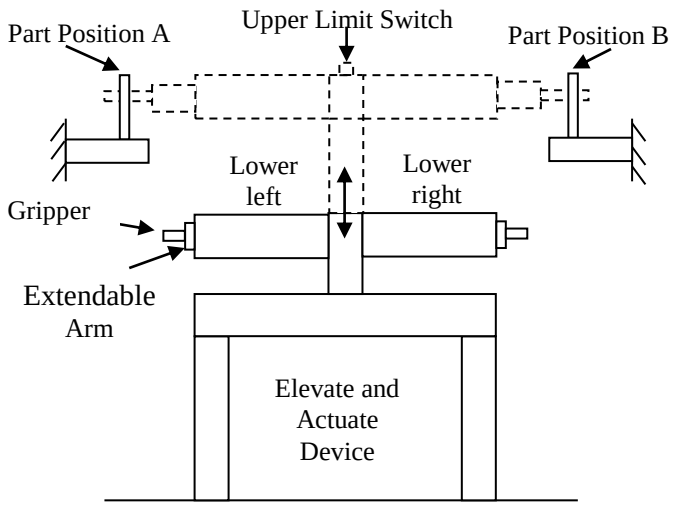

****