Seat No.: _____ Enrolment No._____

GUJARAT TECHNOLOGICAL UNIVERSITY

BE - SEMESTER–IV(New) EXAMINATION – SUMMER 2016

Subject Code:2140304 **Date:30/05/2016**

Subject Name:Microprocessor & its Interfacing

Time:10:30 AM to 01:00 PM **Total Marks: 70**

Instructions:

1. **Attempt all questions.**
2. **Make suitable assumptions wherever necessary.**
3. **Figures to the right indicate full marks.**

			MARKS
Q.1		**Short Questions**	**14**
	1	Define PSW.	
	2	What is Auxiliary Carry?	
	3	Why Data Bus is bidirectional in 8085?	
	4	How many Address lines are required for addressing 2048 Bytes of Memory Chip?	
	5	What is Tri state Device?	
	6	What is ALE?	
	7	Which Interrupt has Highest Priority?	
	8	_____ & _____ instruction affect all flags except CY Flag.	
	9	_____instruction does not affect any Flags.	
	10	What is the function of Assembler?	
	11	The _____ Operation does not affect any Flags.	
	12	Explain LDAX B instruction.	
	13	Explain STAX B instruction.	
	14	What is the function of HOLD?	
Q.2	**(a)**	Explain the difference between Absolute Decoding and Partial Decoding.	**03**
	(b)	Explain Demultiplexing of Address Bus.	**04**
	(c)	Explain the Architecture of 8085 with a neat diagram.	**07**
		OR	
	(c)	Draw & explain the Pin Diagram of 8085.	**07**
Q.3	**(a)**	What is the Difference between Peripheral mapped I/O & Memory mapped I/O?	**03**
	(b)	Explain 8085 Assembly language and Machine Language.	**04**
	(c)	Write a short note on Memory classification in 8085.	**07**
		OR	
Q.3	**(a)**	Define: Instruction cycle, Machine Cycle & T-state.	**03**
	(b)	Write a short note on Interrupts.	**04**

(c) Illustrate the memory address range of the chip with 256 bytes of Memory, shown in figure (a) and explain how the range can be changed by modifying the hardware of the Chip select CS line in fig (b). **07**

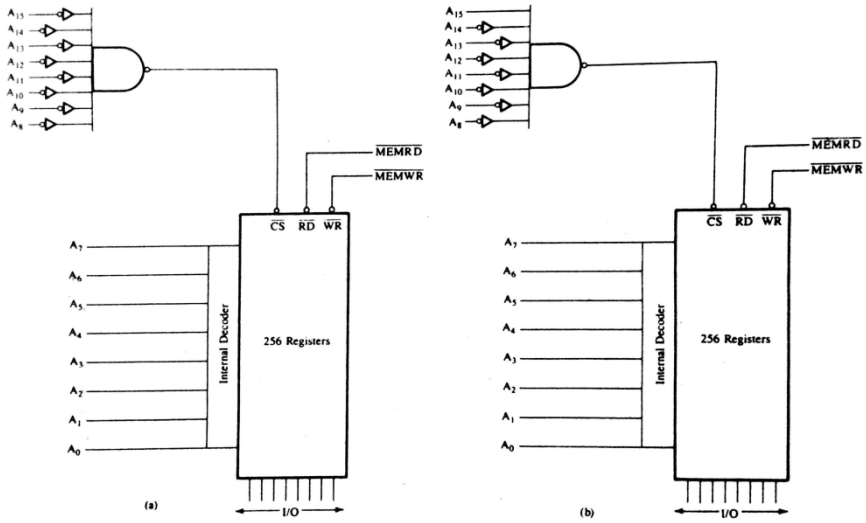

Q.4 **(a)** Explain: (i) INTR (ii) READY (iii) CMC **03**

(b) Explain the addressing modes in 8085 with examples. **04**

(c) Explain the timing Diagram for the Instruction MVI A,32H.where the machine codes are stored at 2000H &2001H location. Calculate the time required for entire Instruction cycle if the clock frequency is 2Mhz. **07**

OR

Q.4 **(a)** Distinguish between (i)RAL & RRC **03**

(b) Compare (i) Jump and Call instruction (ii) Serial & Parallel Transfer. **04**

(c) Explain the Timing Diagram of Memory Write Cycle. **07**

Q.5 **(a)** What is stack & Stack Pointer Register? **03**

(b) What is USART? Draw the functional Block diagram of 8251. **04**

(c) Explain Control Word format and different modes of 8254. **07**

OR

Q.5 **(a)** Explain RIM & SIM Instructions. **03**

(b) Explain the working of 8255 in various modes. **04**

(c) Draw & Explain the block diagram of 8259A Interrupt Controller. **07**

****