Seat No.: _____ Enrolment No._____

GUJARAT TECHNOLOGICAL UNIVERSITY

BE - SEMESTER–IV(New) EXAMINATION – SUMMER 2016

Subject Code:2140307 **Date:08/06/2016**

Subject Name:Control System and Analysis

Time:10:30 AM to 01:00 PM **Total Marks: 70**

Instructions:

1. **Attempt all questions.**
2. **Make suitable assumptions wherever necessary.**
3. **Figures to the right indicate full marks.**

MARKS

Q.1 **Select the correct answer from multiple choice questions.** **14**

1 With feedback _____ reduces.

A system stability B system gain
C system stability and gain D none of the above

2 The transfer function technique is considered as inadequate under which of the following conditions ?

A Systems having complexities and non-linearities B Systems having stability problems
C Systems having multiple input disturbances D All of the above

3 If the gain of the critical damped system is increased it will behave as

A oscillatory B critically damped
C overdamped D underdamped

4 An impulse function is a derivative of _____ function.

A Parabolic B Step
C Ramp D Linear

5 The required for the response to rise and stay within the tolerance band is called as

A Rise time B Pickup time
C Settling time D Transient time

6 The time required for the response to rise from 10% to 90% of the final value for over damped systems and 0 to 100% of the final value for under damped systems is called the

A Rise time B Pickup time
C Settling time D Transient time

7 Control systems are normally designed with a damping factor

A Less than unity B Of unity
C Of Zero D More than unity

8 The overshoot (an indication of the largest error between the actual and desired output) is the ratio of

A Transient error to peak error B Dynamic error to peak error
C Maximum overshoot to final desired value D None of the above

9 Which of the following should be done to make an unstable system stable?

A The gain of the system should be decreased B The gain of the system should be increased
C The number of poles to the loop transfer function should be increased D The number of zeros to the loop transfer function should be increased

10 As a result of introduction of negative feedback which of the following will not decrease?

A Band width B Overall gain
C Distortion D Instability

11 Which of the following statements is correct for a system with gain margin close

to unity or a phase margin close to zero?

A The system is relatively stable B The system is highly stable
C The system is highly oscillatory D None of the above

12 In force-voltage analogy, velocity is analogous to

A current B charge
C inductance D capacitance

13 If the characteristic equation of a closed-loop system is $S^2 + 2S + 2 = 0$, then the system is

A over damped **B** critically damped
C underdamped **D** undamped

14 The root-locus diagram for a closed loop feedback system is shown in Figure. The system is overdamped

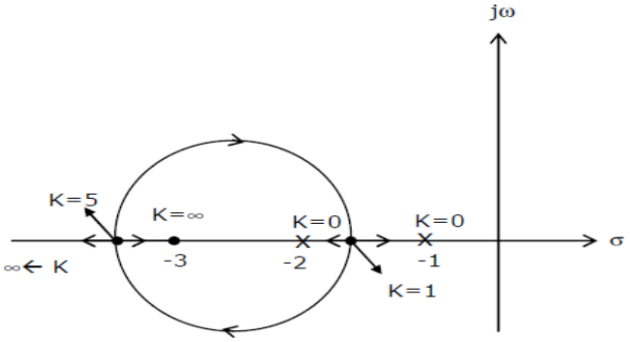

A only if 0 < K < 1 **B** only if 1 < K < 5
C only if K > 5 **D** Only if K < 1 and K > 5

Q.2 **(a)** If the system transfer function is as given below, find the differential equation representing the system. **03**

$$\frac{Y(s)}{X(s)} = \frac{(s+4)}{s^2+2s+5}$$

(b) Find the inverse Laplace transform of given F(s). **04**

$$F(s) = \frac{(s+2)}{s(s+3)(s+4)}$$

(c) Obtain the close loop transfer function of below given system using block diagram reduction technique. **07**

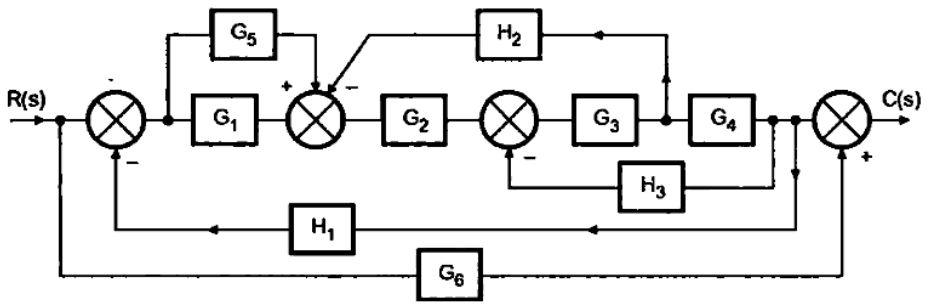

OR

(c) The system block diagram is given below. Find **07**

1. $\frac{C(s)}{E(s)}$ if N(s) = 0 2. $\frac{C(s)}{R(s)}$ if N(s) = 0 3. $\frac{C(s)}{N(s)}$ if R(s) = 0

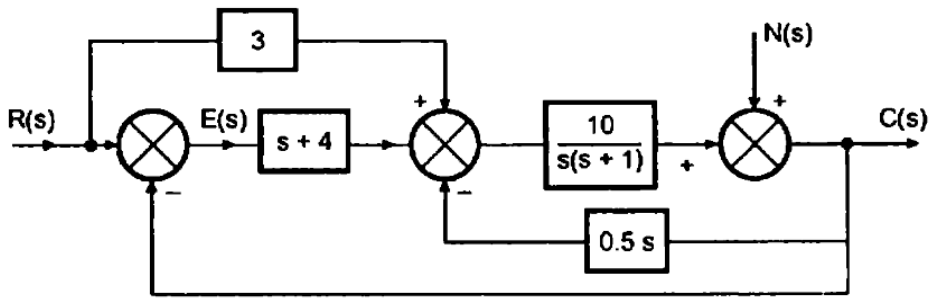

Q.3 **(a)** Draw the ramp responses of TYPE '0', '1' & '2' for both First & Second order systems illustrating steady state error of systems. **03**

(b) Find the steady state error for various types of standard test inputs for a unity feedback system with $G(s) = \dfrac{K}{s(s+5)(s+10)}$ for values of **04**

a) K = 10 b) K = 200

(c) Find the transfer function of given circuit using mason's gain formula. **07**

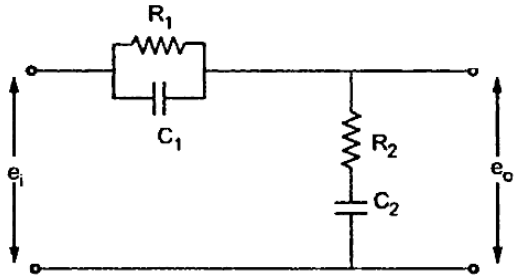

OR

Q.3 **(a)** Construct the signal flow graph for the following set of simultaneous equations. **03**

$$X_2 = A_{21}X_1 + A_{23}X_3$$
$$X_3 = A_{31}X_1 + A_{32}X_2 + A_{33}X_3$$
$$X_4 = A_{42}X_2 + A_{43}X_3$$

(b) Find the transfer function from the signal flow graph constructed in above example using mason's gain formula. **04**

(c) Determine the transfer function for below given signal flow graph using mason's gain formula. **07**

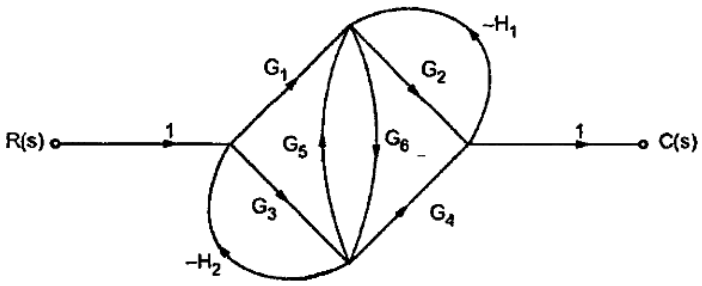

Q.4 **(a)** Determine the K_p, K_v & K_a for the system with **03**

$$G(s) = \frac{100}{s(s+0.5)(4-s)(s+1000)}, H(s) = 1$$

(b) For a unity feedback system $G(s) = \dfrac{36}{s(s+0.72)}$, find the peak time, settling time, peak overshoot and number of cycles completed before output settles for a unit step input. **04**

(c) Sketch the Nyquist plot and comment on the closed loop stability of a system whose open loop transfer function is $G(s)H(s) = \dfrac{10}{s^2(s+2)}$ **07**

OR

Q.4 **(a)** For a feedback control system $G(s)H(s) = \dfrac{40}{(s^2+2s+2)(s+4)}$, draw the Nyquist plot. **03**

(b) Find the gain margin and stability from the Nyquist plot from above example. **04**

(c) Draw the complete root locus and predict the stability for the system having **07**

$$G(s)H(s) = \frac{K(s+5)}{(s^2+4s+20)}$$

Q.5 **(a)** Determine the openloop transfer function, of a system whose asymptotic gain plot is as given below. **03**

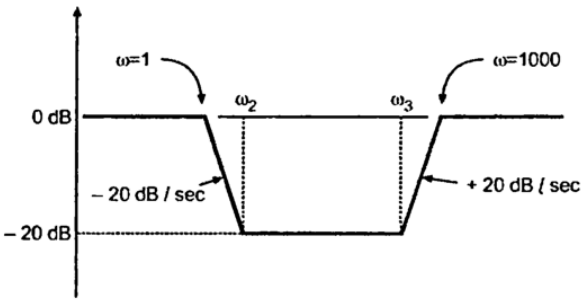

(b) Determine the stability of the system having characteristic equation, **04**
$s^5 + s^4 + 2s^3 + 2s^2 + 3s + 5 = 0$

(c) Draw the polar plot and determine the stability of the system **07**
$G(s)H(s) = \dfrac{12}{s(s+1)(s+2)}$.

OR

Q.5 **(a)** Determine the value of K for a feedback control system having **03**
$G(s)H(s) = \dfrac{K}{s(1+s/4)(1+s/40)}$ for below listed cases.
i) Gain Margin = 20 dB and *ii)* Phase Margin = 30˚.

(b) Draw the bode plot for the system given in above example. **04**

(c) Draw the polar plot and determine the value of K for a stability of the system given by $G(s)H(s) = \dfrac{K}{s^2(s+1)(s+5)}$. **07**

****