Seat No.: _____ Enrolment No._____

GUJARAT TECHNOLOGICAL UNIVERSITY

BE - SEMESTER–IV(New) EXAMINATION – SUMMER 2016

Subject Code:2142003 **Date:01/06/2016**

Subject Name:Control Theory

Time:10:30 AM to 01:00 PM **Total Marks: 70**

Instructions:

1. **Attempt all questions.**
2. **Make suitable assumptions wherever necessary.**
3. **Figures to the right indicate full marks.**

Q.1	**(a)**	**Short Questions**	**07**
	1	Define term 'system'.	
	2	What is feedback?	
	3	Define Transfer function.	
	4	What is transient response?	
	5	Give advantages of Routh's criterion.(at least two)	
	6	Define gain crossover frequency.	
	7	What is self loop?	
	(b)	Explain requirement of good control system.	**07**
Q.2	**(a)**	Compare open loop and close loop control system.	**03**
	(b)	Explain transfer function for standard test signal.	**04**
	(c)	Write a note on gear train.	**07**
		OR	
	(c)	Describe liquid level system and derive transfer function of liquid level system with interaction.	**07**
Q.3	**(a)**	Explain poles and zeros with an example.	**03**
	(b)	Explain Force-Voltage analogous system.	**04**
	(c)	Using block diagram reduction technique find the close loop transfer function of the system given in fig.	**07**

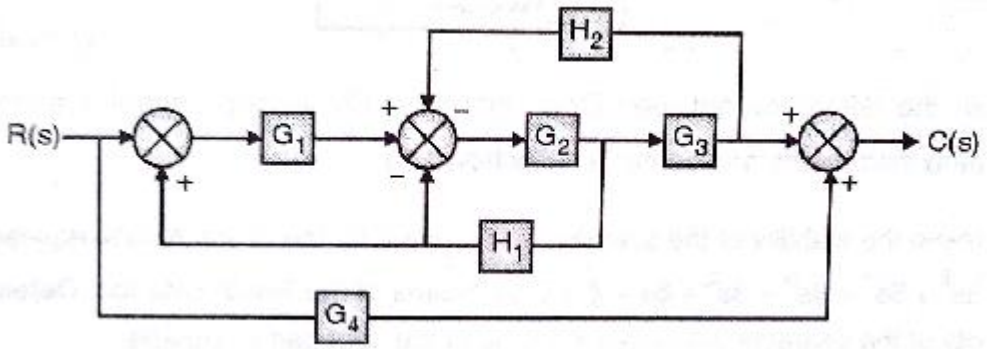

OR

Q.3	**(a)**	Define : 1) state variable, 2) state vector, 3) state space	**03**
	(b)	Explain Force-Control analogous system.	**04**

(c) Draw signal floe graph of the system shown in fig. Obtain overall system transfer function using mason's gain formula. **07**

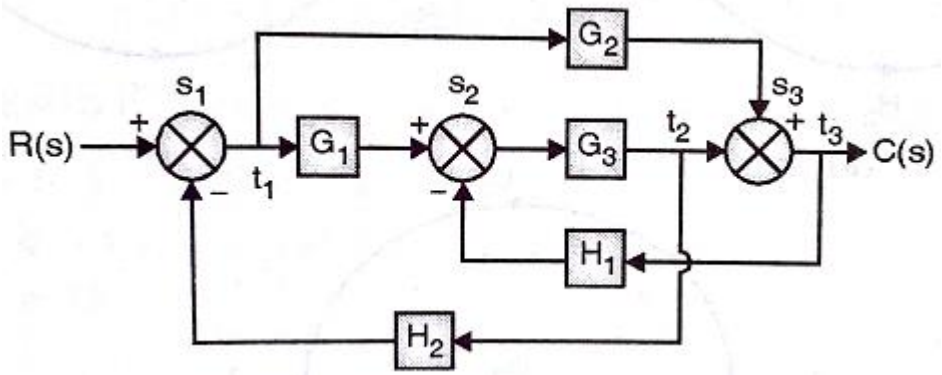

Q.4 **(a)** Explain Routh's stability criterion. **03**

(b) Define : 1) delay time, 2) rise time, 3) pick time, 4) settling time **04**

(c) Plot the root locus for given transfer function **07**

$$G(s)H(s) = \frac{K}{s(s+1)(s+4)}$$

OR

Q.4 **(a)** Check the stability using routh's criterion **03**
$S^6+2S^5+8S^4+12S^3+20S^2+16S+16$

(b) Draw the response of three damping condition and explain critical damping for second order system. **04**

(c) Explain the steps for plot root locus. **07**

Q.5 **(a)** Write advantages and of frequency domain analysis. **04**

(b) For the system having the open loop transfer function **10**

$$G(s)H(s) = \frac{10}{s(s+1)(s+10)}$$

Determine the stability of the system by plot the bode plot of the system.

OR

Q.5 **(a)** What is state diagram representation for 1) scalar, 2) adder, 3) integrator. **03**

(b) Write advantages and disadvantages of nyquist plot. **04**

(c) Sketch the polar plot of the transfer function given below, determine whether the plot cross the real axis or not? **07**

$$G(s) = \frac{1}{s(1+s)(1+2s)}$$

****