Seat No.: _____ **Enrolment No._____**

GUJARAT TECHNOLOGICAL UNIVERSITY

BE - SEMESTER–V (NEW) - EXAMINATION – SUMMER 2016

Subject Code:2150305 **Date:06/05/2016**

Subject Name:Modelling & Simulation of Physiological systems

Time:02:30 PM to 05:00 PM **Total Marks: 70**

Instructions:

1. **Attempt all questions.**
2. **Make suitable assumptions wherever necessary.**
3. **Figures to the right indicate full marks.**

Q.1	**(a)**	Contrast Engineering & Physiological Control System with appropriate examples.	**07**
	(b)	What is starling's law for regulation of cardiac output? Explain the model for change in cardiac output due to heart rate.	**07**
Q.2	**(a)**	What is the need of physiological modeling? Explain with example.	**07**
	(b)	Draw the SIMULINK model of neuromuscular reflex model with necessary equations.	**07**
		OR	
	(b)	Draw the SIMULINK model for glucose-insulin regulation with necessary equations.	**07**
Q.3	**(a)**	Draw & describe the physiological control system for knee reflex.	**07**
	(b)	Compare distributed parameter versus lumped parameter model with appropriate examples.	**07**
		OR	
Q.3	**(a)**	Compare the features of non-parametric & parametric model.	**07**
	(b)	Describe the frequency response of a model for circulatory control with necessary graphs.	**07**
Q.4	**(a)**	Explain robinson's model with agonist & antagonist neurological control signal.	**07**
	(b)	Draw and explain the schematic model of regulation of glucose & insulin.	**07**
		OR	
Q.4	**(a)**	Explain westheimer's saccadic eye movement model. Enlist the limitations of westheimer's model.	**07**
	(b)	Plot the responses of the second-order lung mechanics model to a unit impulse under open-loop and closed-loop modes.	**07**
Q.5	**(a)**	Draw steady-state analysis of glucose regulation in normal conditions & diabetic patient. Also derive a mathematical function to estimate the steady-state glucose and insulin levels in a patient with an abnormally high gain in the insulin response to glucose. (Assume β to be twice as large as its normal value.)	**07**
	(b)	Contrast the methods of static vs. dynamic analysis with appropriate examples.	**07**
		OR	

Q.5 **(a)** Develop the mechanical equivalent of the electrical analog of respiratory mechanics shown in figure. **07**

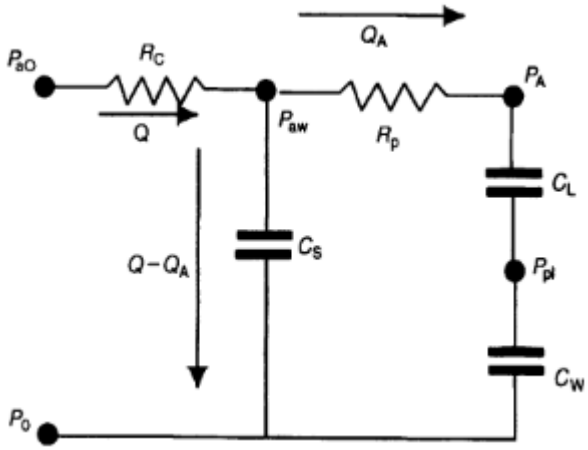

(b) Draw & explain the curves of Cardiac Output and Venous Return for below given conditions. **07**

1. Normal
2. Moderate Exercise
3. Heart Failure

****