Seat No.: _____ Enrolment No._____

GUJARAT TECHNOLOGICAL UNIVERSITY

BE - SEMESTER–VI (NEW) - EXAMINATION – SUMMER 2016

Subject Code:2160609 **Date:19/05/2016**

Subject Name: Computational Mechanics

Time: 10:30 AM to 01:30 PM **Total Marks: 70**

Instructions:

1. **Attempt all questions.**
2. **Make suitable assumptions wherever necessary.**
3. **Figures to the right indicate full marks.**
4. **Draw neat & clean sketches with pencil only.**

Q.1 **(a)** Determine the elements of the stiffness matrix for a grid member. **07**

(b) A bar shown in **fig.1**. has an axial load P = 100 X 10^3 N. Determine the 1) Nodal displacement. 2) Stresses in each element. 3) Reaction forces. **07**

Q.2 **(a)** Analyse the plane truss shown in **fig.2.** and determine deflections and reactions at the joints. Use the concept of symmetry. **07**

(b) Analyse the frame for **fig.3.** by stiffness matrix method using member approach. Formulate rearranged SJ matrix only. Take AE = EI = Constant. **07**

OR

(b) Analyse the beam shown in **fig.4.** using stiffness member approach and plot SF & BM diagrams. Use the concept of symmetry. **07**

Q.3 **(a)** What is non linearity? Explain Geometrical, Material and Loading non linearity giving appropriate examples **07**

(b) Analyse the beam shown in **fig.5.** using stiffness member approach and plot SF & BM diagrams. **07**

OR

Q.3 **(a)** Enlist steps involved in FEM analysis and explain any two in detail. **07**

(b) Analyse the beam shown in **fig 6**. For following condition in addition to loading **07**
1) Joint 'B' is having elastic support of stiffness 4EI/L.
2) Joint 'C' is having rotational spring of stiffness EI/L. Take EI=2000KN.m^2

Q.4 Analyse the grid as shown in **fig.7**. Find out reactions & Draw B.M, S.F and Torsional moment diagrams. Use the concept of symmetry. Take GJ = 16X10^3 N.m^2, EI = 20X10^3 N.m^2. **14**

OR

Q.4 Analyse the grid as shown in **fig.8**. Find out reactions & Draw B.M, S.F and Torsional moment diagrams. Take GJ=EI= Constant. **14**

Q.5 **(a)** Analyse the frame for **fig.9** by stiffness matrix method using member approach. Find Load Vector Only. Use the concept of symmetry. **07**

(b) Find the displacement of the composite structure shown in **fig.10**. Using stiffness member matrix C/S of beam is 150mmX200mm. E_{beam} = 20000N/mm^2 **07**

OR

Q.5 **(a)** For the CST element Shown in **fig.11** below the nodel displacements are given as U_1=2 mm ,U_2=0.5 mm ,U_3= 3 mm V_1=1 mm,V_2= 0 mm, V_3= 1 mm. Determine the Element Stresses σ_x, σ_y and τ_{xy} .Take E=200 Gpa Poisson's ratio=0.25 **07**

(b) Derive the expression for the shape function of two noded & three noded Bar element taking natural coordinate ϵ as varying from -1 to 1. **07**

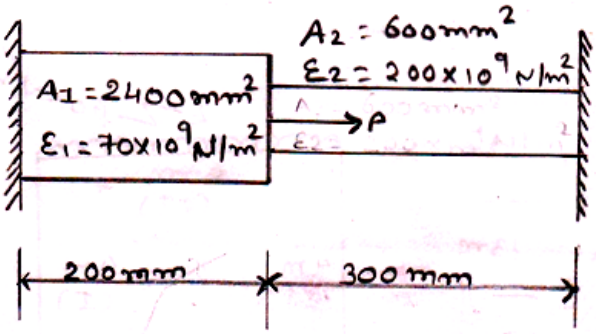

FIG-1

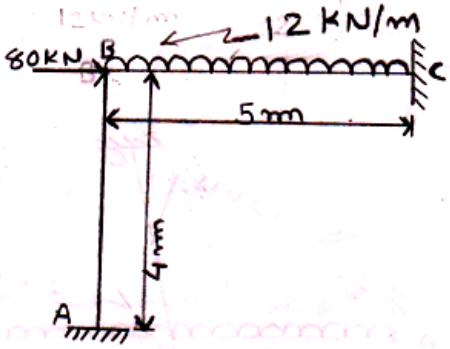

FIG-3

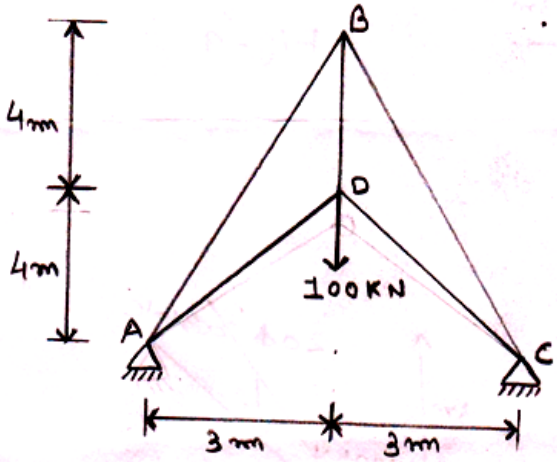

FIG-2

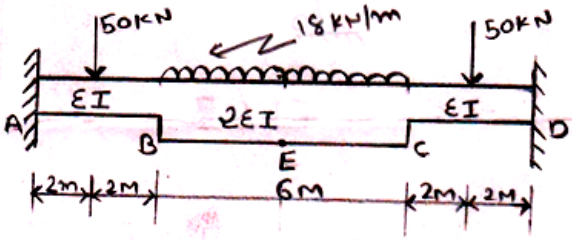

FIG-4

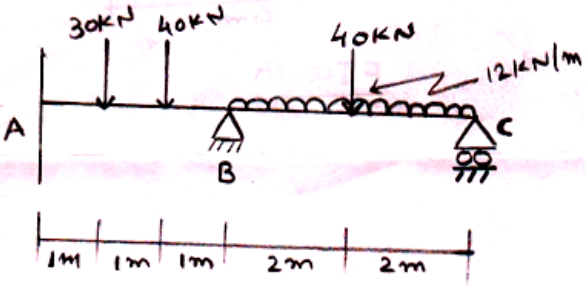

FIG-5

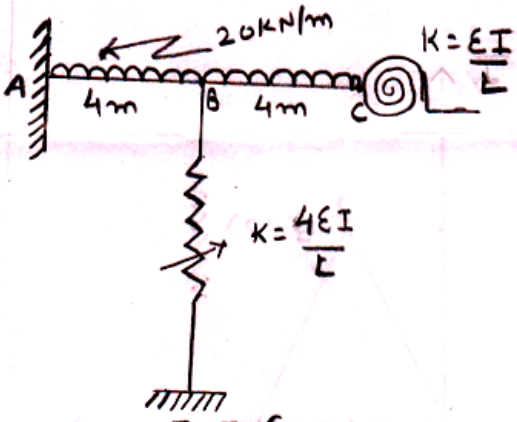

FIG-6

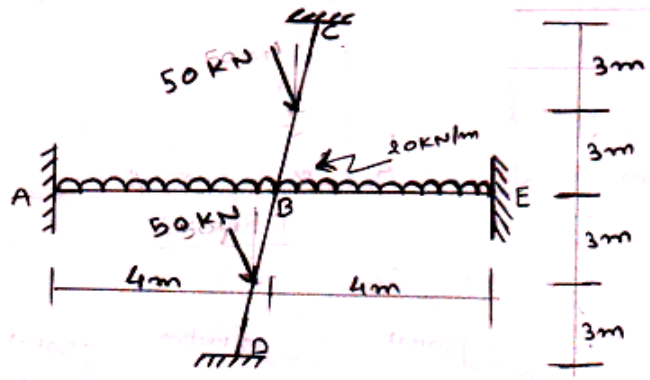

FIG-7

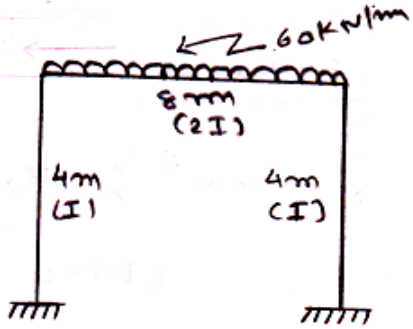

Fig-9

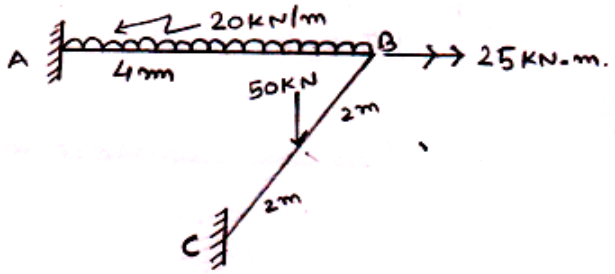

FIG-8

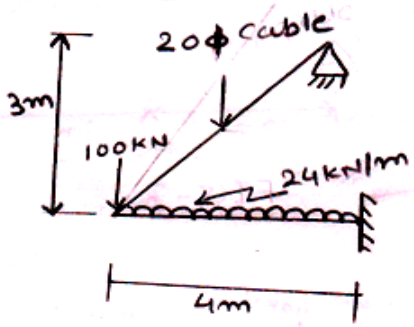

FIG-10

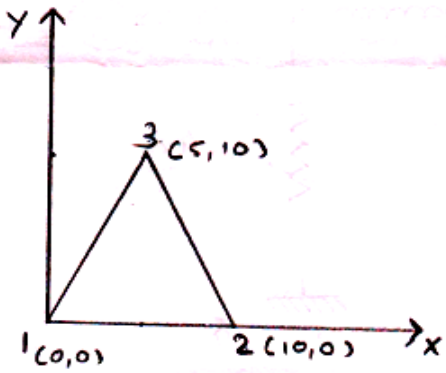

FIG-11