Seat No.: _____ Enrolment No._____

GUJARAT TECHNOLOGICAL UNIVERSITY

BE- SEMESTER– 1st / 2nd EXAMINATION – SUMMER 2016

Subject Code: ENG002 **Date:26/05/2016**

Subject Name: ENGINEERING GRAPHICS

Time:02:30 PM to 5:30 PM **Total Marks: 70**

Instructions:

1. **Attempt any five questions.**
2. **Make suitable assumptions wherever necessary.**
3. **Figures to the right indicate full marks.**

Q.1	**(a)**	(i) What do you understand by (1) Chain Dimensioning (2) Parallel Dimensioning (3) Combine Dimensioning? Explain with sketches.	**04**
		(ii) Differentiate between Unidirectional system and Aligned system of dimensioning.	**03**
	(b)	The foci of an ellipse are 120 mm apart and the minor axis is 70 mm long. Draw the ellipse by concentric circle method.	**07**
Q.2	**(a)**	(i) Construct a plain scale to show kilometers and hectometers when 25 mm is equal to 1km and long enough to measure up to 6 km. Find RF and show a distance of 3 km and 4 hectometer on the scale.	**04**
		(ii) Draw an isometric scale and show a measurement of 46 mm on the scale.	**03**
	(b)	A straight AB has its end A 10 mm above HP and end B 50 mm in front of the V.P. Draw the projections of Line AB, if it is inclined to H.P. by 30^0 and V.P by 45^0 and it is 50 mm long.	**07**
Q.3	**(a)**	A circular disc of diameter AB = 80 mm, rotates about its centre O for one revolution. The point P which is initially at A moves to the centre when the disc completes the half revolution and then comes back to A in remaining half revolution. Trace the locus of the point P assuming the rotation of the disc and the movement of the point to the uniform.	**07**
	(b)	A circular plane of 60 mm diameter is resting on HP on a point A of its circumference. The plane is inclined at 30^0 to the HP. The diameter AE of the plane makes an angle of 45^0 with the VP. Draw the projections of the circular plane.	**07**
Q.4	**(a)**	A pentagonal pyramid of 35 mm base edge and 70 mm height is resting on the HP with one of its triangular surfaces perpendicular to the HP, and parallel and nearer to VP. Draw its projections.	**07**
	(b)	A cube of 50 mm long edges has its vertical faces equally to VP. It is cut by a section plane perpendicular to VP so that the true shape of the section is a regular hexagon. Determine the inclination of the cutting plane with the HP and draw the sectional top view and true shape of the section.	**07**

Q.5 **(a)** A right regular pentagonal prism, edge of the base 20 mm and height 50 mm rests on its base with one of its base edges perpendicular to VP. An AIP inclined to HP at 30^0 and perpendicular to the VP cuts its axis at a distance of 30 mm from the base. Develop the lateral surface of the truncated prism. **07**

(b) Draw the projections of the following points on the same XY line. **07**

(1) Point A in VP. 30 mm below HP.
(2) Point B in HP .20 mm in front of VP.
(3) Point C 20 mm above HP and 20 mm behind VP.
(4) Point D 25 mm below HP and 40 mm behind VP.
(5) Point E on HP and on VP.
(6) Point F 40 mm above HP and 10 mm in front of VP.
(7) Point G on VP 35 mm above HP.

Q.6 Figure shows the pictorial view of the object. Draw (1) Full sectional F.V (2) TOP VIEW and (3) R.H.S.View in first angle projection method. **14**

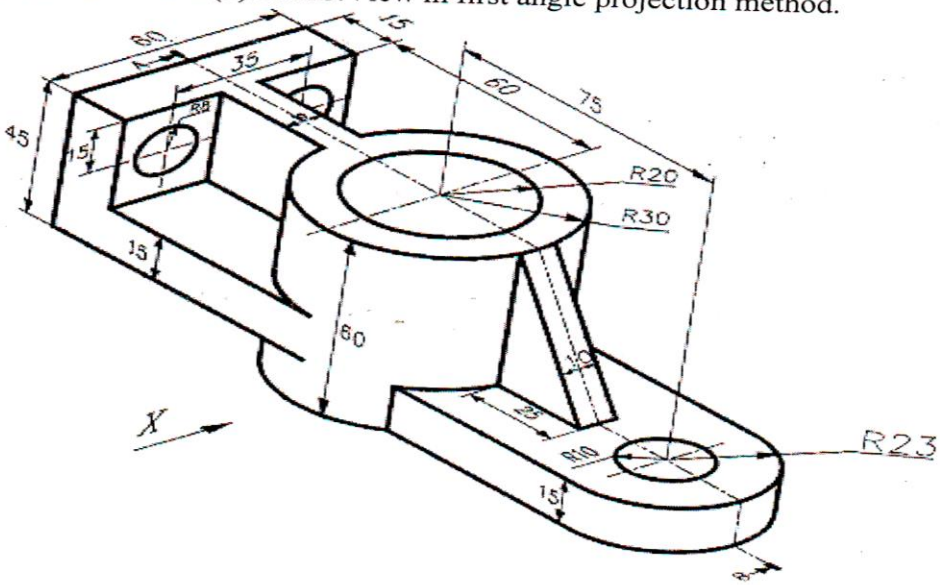

Q.7 Draw the isometric view of the following orthographic views shown in Fig. **14**