Seat No.: _____ **Enrollment No._____**

GUJARAT TECHNOLOGICAL UNIVERSITY

BE - SEMESTER– 1st / 2nd EXAMINATION– SUMMER 2016

Subject Code: TEE011 **Date:15/06/2016**

Subject Name: Basic Electronics

Time:02:30 PM to 5:00 PM **Total Marks: 70**

Instructions:

1. **Attempt any five questions.**
2. **Make suitable assumptions wherever necessary.**
3. **Figures to the right indicate full marks.**

Q.1	**(a)**	Classify the electrical energy sources and explain in brief.	**07**
	(b)	Explain Resisters, Capacitors and Inductors in brief.	**07**
Q.2	**(a)**	Determine the Current through 4 Ω resistor branch of the following network using Mesh analysis.	**07**

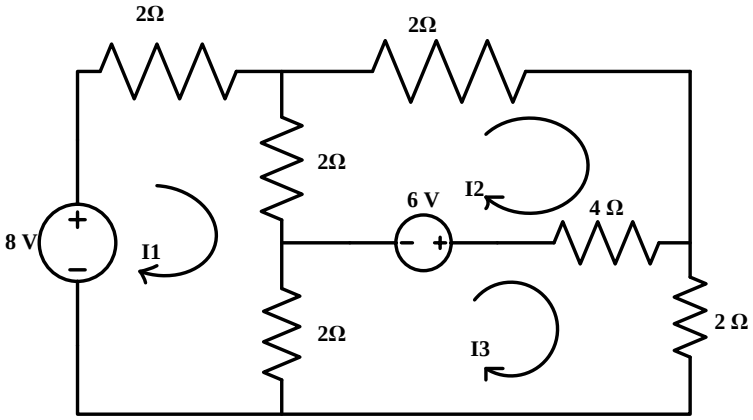

	(b)	Sketch the block diagram of Cathode Ray Oscilloscope and explain it.	**07**
Q.3	**(a)**	Explain the superposition theorem to solve the multisource network with example.	**07**
	(b)	Explain the Norton's theorem to solve the network with example.	**07**
Q.4	**(a)**	Explain the DELTA-WYE transformation in brief with necessary equations and circuit diagrams.	**07**
	(b)	Explain the KCL and KVL with equations.	**07**
Q.5	**(a)**	Draw the amplifier block and write down the characteristics of ideal Op-amp.	**07**
	(b)	Draw and explain the circuit diagram of Inverting and Non-inverting amplifier using Op-amp.	**07**
Q.6	**(a)**	Draw and explain the circuit diagram of adder and integrator circuits using Op-amp.	**07**
	(b)	Sketch the block diagram of Computer systems and explain each block.	**07**
Q.7	**(a)**	Draw and explain different network topologies.	**07**
	(b)	Draw the symbols and write down the truth tables of two input AND, OR, NOT, NAND, NOR, EX-OR, EX-NOR gates.	**07**

****