Seat No.: _____ Enrolment No._____

GUJARAT TECHNOLOGICAL UNIVERSITY

BE - SEMESTER–1st / 2nd EXAMINATION– WINTER 2015

Subject Code: 110013 **Date:04/01/2016**

Subject Name: Engineering Graphics

Time: 10:30am to 01:30pm **Total Marks: 70**

Instructions:

1. **Attempt any five questions.**
2. **Retain construction lines faint. Make suitable assumptions wherever necessary.**
3. **Figures to the right indicate marks of sub questions.**
4. **Drawing work must be according to BIS-SP46 code.**

Q.1	**(a)**	Differentiate in between first angle projection method and third angle projection method.	**03**
	(b)	Fig.1 shows the Pictorial view of an object. Draw The following views. i)front view ii)top view iii) R.H.S. Use first angle projection method.	**11**
Q.2	**(a)**	OBA is an offset slider crank chain, crank OB is 30mm long and rotates in clockwise direction. Connecting rod AB is 128mm long offset is 40mm. Draw the loci of two pts P and R as shown in fig.2. PB=45mm BR=30mm.	**10**
	(b)	Draw the following lines with their uses i) Centre line. ii) Dotted line iii) Short break line. iv) Cutting plane line.	**04**
Q.3	**(a)**	Two fixed points A and B are 100mm apart. Trace the complete path of a point P moving (in the same plane as that of A&B) in such a way that, the sum of its distances from A and B is always the same and equal to 125mm. Name the curve.	**10**
	(b)	Draw the involute to a square of 25mm side.	**04**
Q.4	**(a)**	A line PQ 100mm long, is inclined at 30˚ to the H.P. and at 45˚ to the V.P. its mid point is in the V.P. and 20mm above the H.P. Draw its projections, if its end P is in the third quadrant and Q in the first quadrant.	**07**
	(b)	A thin 30˚-60˚ set square has its longest edge in the V.P. and inclined at 30˚ the H.P. its surface makes an angle of 45˚ with the V.P. draw its projections.	**07**
Q.5	**(a)**	A square prism, base 40mm side, axis 80mm long has its base on the H.P. and its faces equally inclined to the V.P. it is cut by a plane, perpendicular to the V.P. inclined at 60˚ to the H.P. and passing through a point on the axis,55mm above the H.P. Draw its front view, sectional top view and another top view on A.I.P. parallel to the section plane.	**10**
	(b)	Define the following terms: i) Eccentricity. ii) Inferior trochoid.	**04**
Q.6	**(a)**	A hexagonal pyramid, base 25mm side and axis 55mm long, has one of its slant edges on the ground A plane containing that edge and the axis is perpendicular to the H.P. and inclined at 45˚ to the V.P. draw its projections when the apex is nearer the V.P. Than the base.	**07**

(b) Draw the projections of a cone resting on the ground on its base and show on them, the shortest path by which a point P, starting from a point on the circumference of the base and moving around the cone will return to the same point, base of cone 65mm diameter and axis 75mm long. **07**

Q.7 Figure (3) shows two views of an object draw the isometric projections. 14

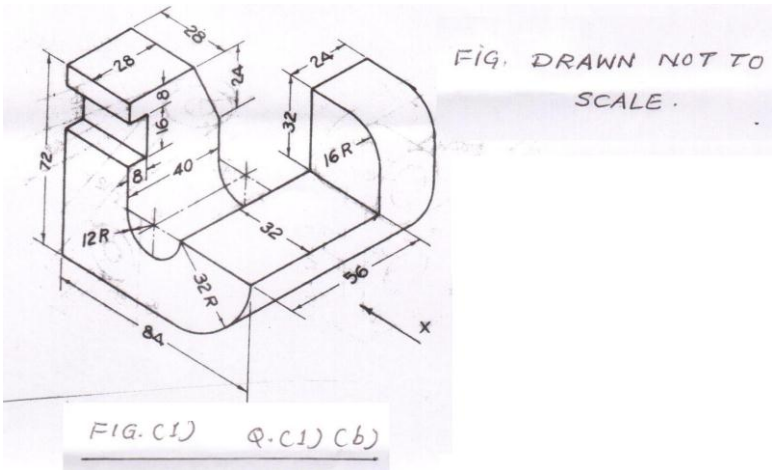

FIG. (1) Q.(1) (b)

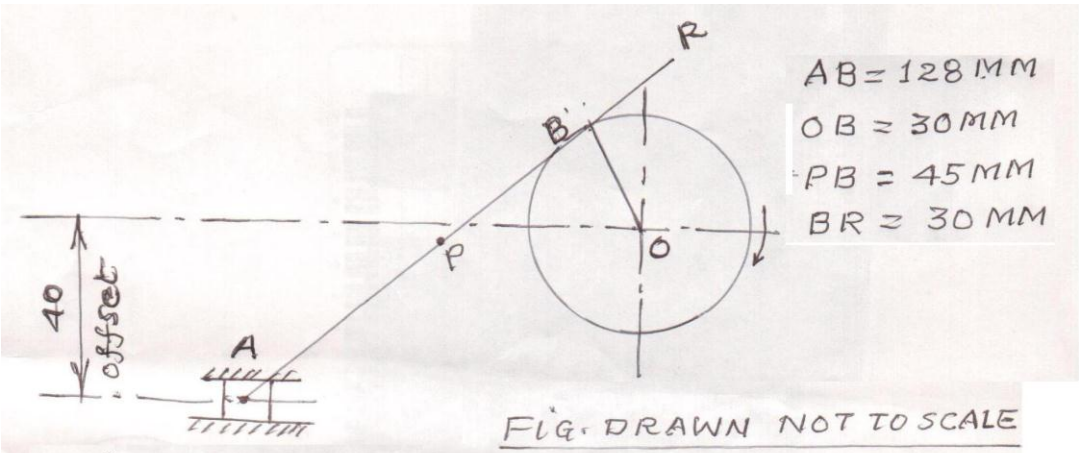

Fig. (2) Q.(2)(a)

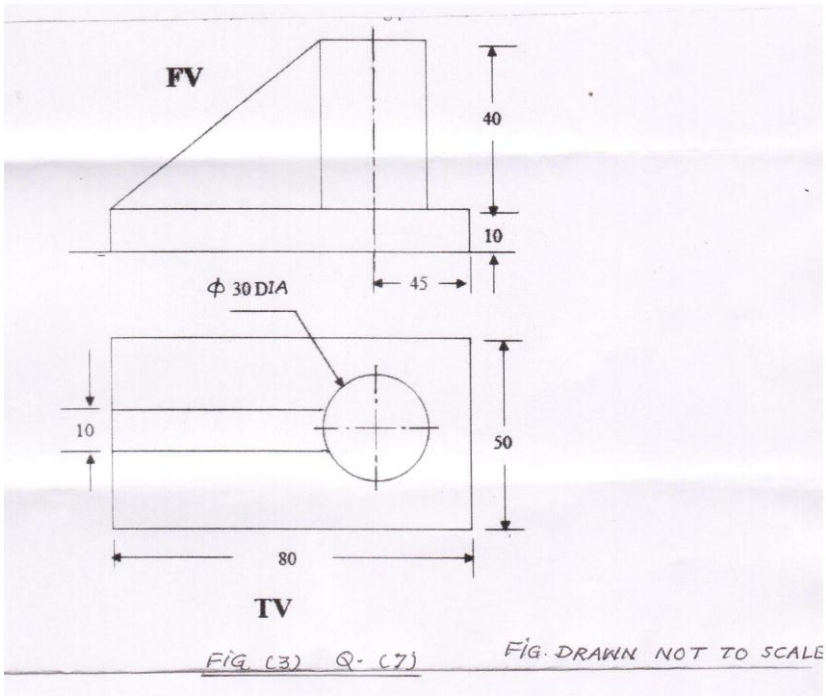

FIG. (3) Q. (7)