Seat No.: _____ Enrolment No._____

GUJARAT TECHNOLOGICAL UNIVERSITY

BE - SEMESTER–III EXAMINATION – WINTER 2015

Subject Code:133405 **Date:02/01/2015**

Subject Name: Manufacturing and Assembly Drawing

Time: 2:30pm to 5:00pm **Total Marks: 70**

Instructions:

1. **Attempt all questions.**
2. **Make suitable assumptions wherever necessary.**
3. **Figures to the right indicate full marks.**

Q.1	**(a)**	Write the abbreviation for following: i) Nickel steel. ii) High Carbon Steel. iii) Grey Cast Iron. iv) Across flats. v) Approximate. vi) Number. vii) Sheet.	**07**
	(b)	Draw the conventions for following machine elements: i) Screw Gears. ii) Leaf Spring with eyes and centre band. iii) Straight Knurling. iv) Serrated Shaft.	**07**
Q.2	**(a)**	Define (i) Allowance (ii) Tolerance (iii) Clearance (iv) Deviation.	**07**
	(b)	Draw to 1:1 scale, the top view and sectional front view of a single riveted lap joint. The thickness of plates is 9 mm. Show at least three rivets in each row. Indicate all dimensions. Use snap head rivets.	**07**
		OR	
	(b)	Explain about Shaft Basis system with suitable example.	**07**
Q.3	**(a)**	What is the function of key? What are the types of Keys? Explain about any two with the help of a sketch.	**07**
	(b)	Draw any four rivet heads of diameter‘d’ and show the proportions of the same.	**07**
		OR	
Q.3		Details of a Cotter Joint with Sleeve are shown in fig.1. Draw the front view in section of the assembled joint to 1:1 scale.	**14**
Q.4		Detail drawings of solid muff coupling are shown in fig.2. Draw to 1:1 scale front view in section of the completely assembled coupling.	**14**
		OR	
Q.4		Prepare the production drawing of the component ‘Crank’ from the fig.3.	**14**
Q.5		Fig.4 shows the different parts of a Machine vise. Prepare the front view of the assembly.	**14**
		OR	
Q.5	**(a)**	Write a short note on Geometrical, Form and Positional tolerances.	**07**
	(b)	Draw hand injection mould for a cup outside diameter 40 mm, overall height 5mm and wall thickness of 1.2 mm.	**07**

****

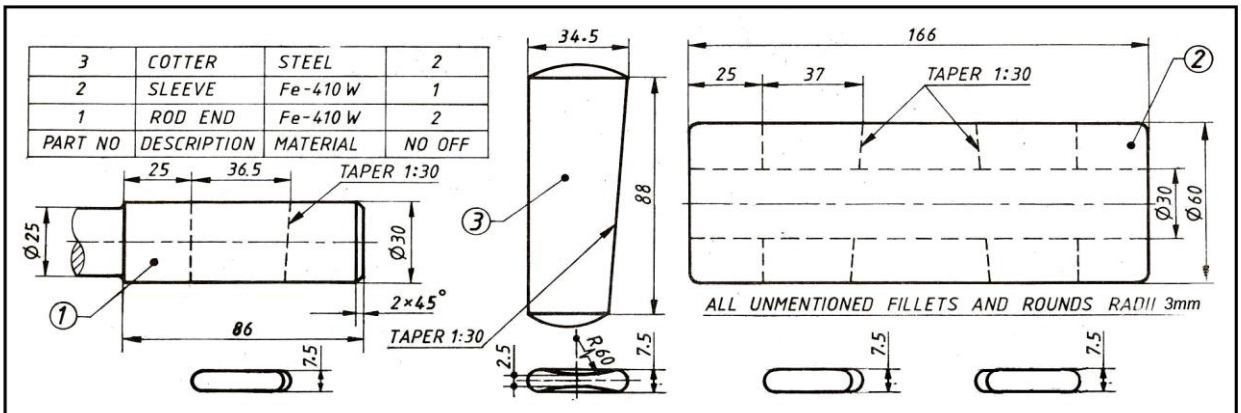

PART NO	DESCRIPTION	MATERIAL	NO OFF
3	COTTER	STEEL	2
2	SLEEVE	Fe-410 W	1
1	ROD END	Fe-410 W	2

Details of Cotter Joint with Sleeve

Fig. 1

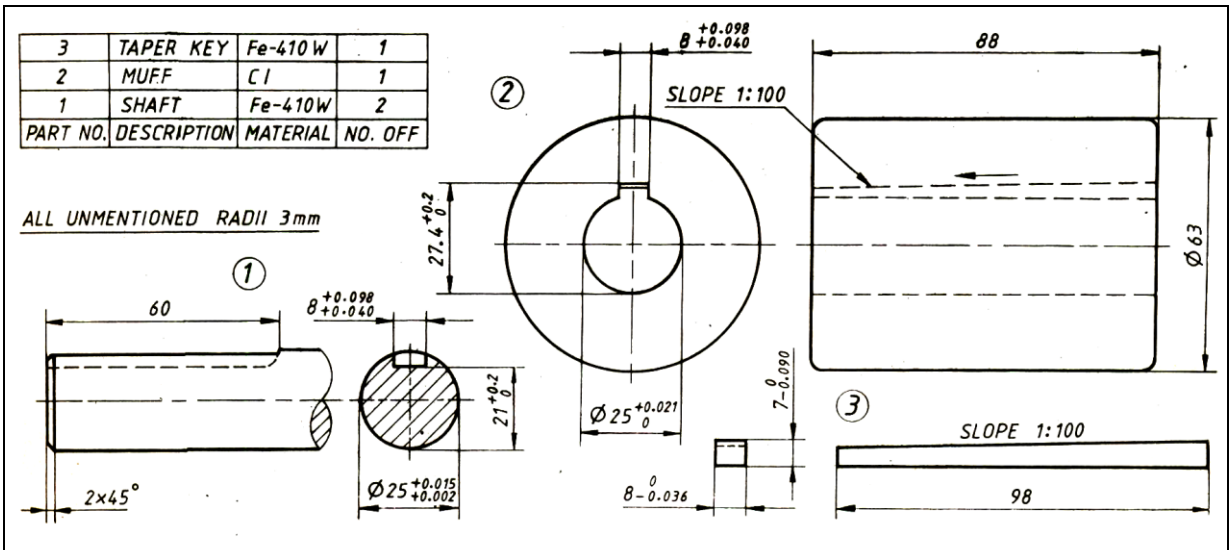

PART NO.	DESCRIPTION	MATERIAL	NO. OFF
3	TAPER KEY	Fe-410 W	1
2	MUFF	C I	1
1	SHAFT	Fe-410W	2

All Dimensions in mm

Details of Solid Muff Coupling

Fig. 2

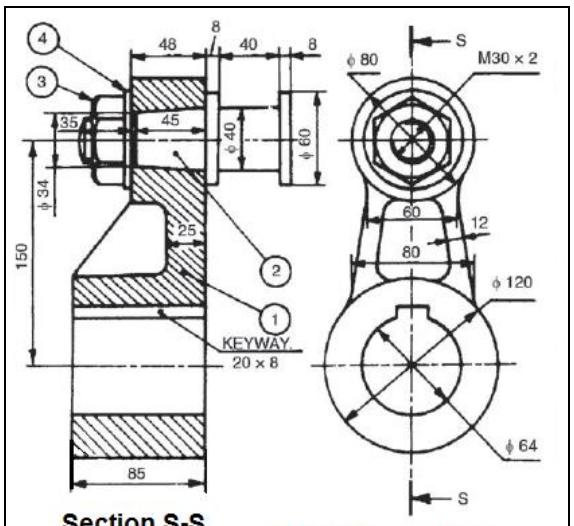

All dimensions are in 'mm'

PART No	NAME	MATERIAL	QTY.
1	Crank	Forged steel	1
2	Crank pin	45C	1
3	Nut	MS	1
4	Washer	MS	1

Fig. 3

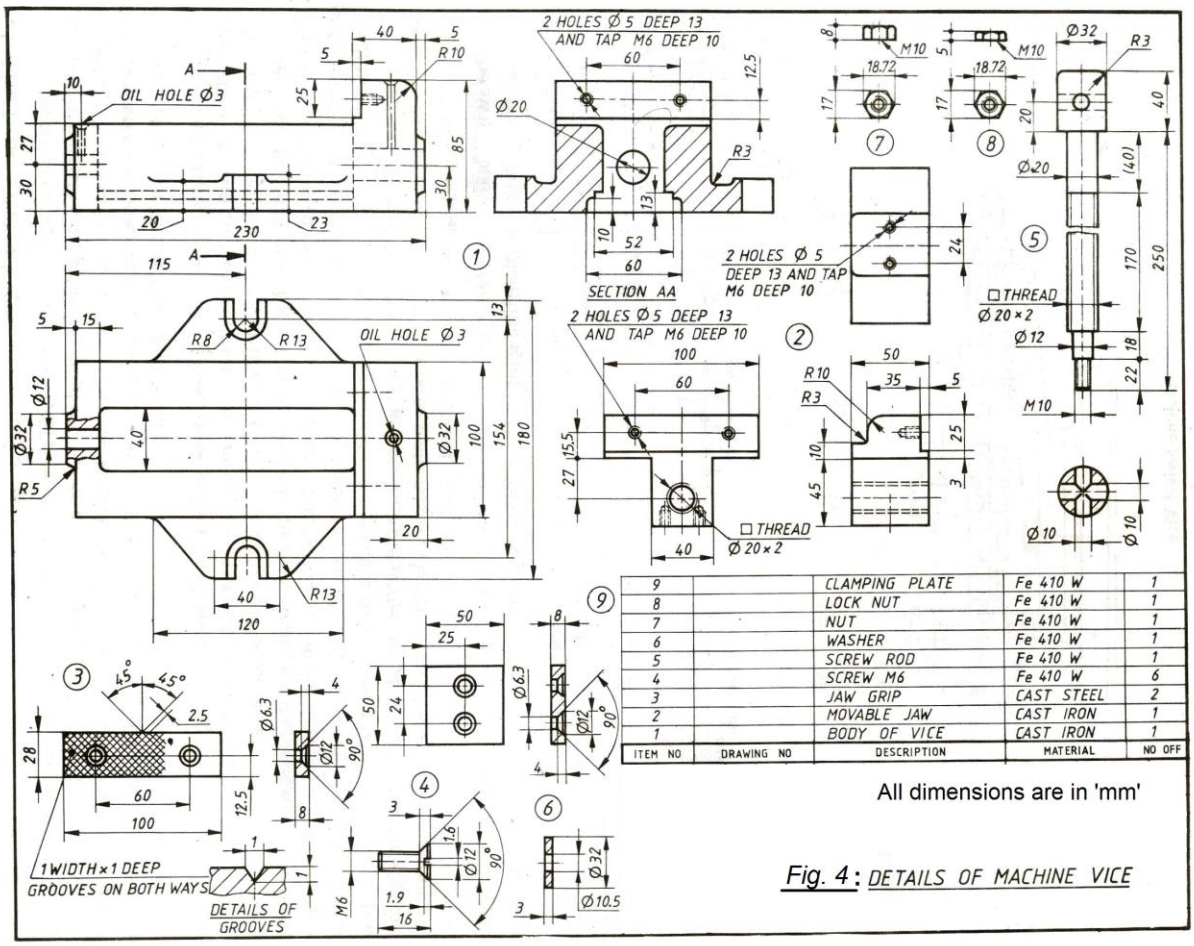

ITEM NO	DRAWING NO	DESCRIPTION	MATERIAL	NO OFF
9		CLAMPING PLATE	Fe 410 W	1
8		LOCK NUT	Fe 410 W	1
7		NUT	Fe 410 W	1
6		WASHER	Fe 410 W	1
5		SCREW ROD	Fe 410 W	1
4		SCREW M6	Fe 410 W	6
3		JAW GRIP	CAST STEEL	2
2		MOVABLE JAW	CAST IRON	1
1		BODY OF VICE	CAST IRON	1

Fig. 4 : DETAILS OF MACHINE VICE