Seat No.: _____ Enrolment No._____

GUJARAT TECHNOLOGICAL UNIVERSITY

BE - SEMESTER–V EXAMINATION – WINTER 2015

Subject Code: 151003 **Date:17/12/2015**

Subject Name: Integrated Circuits and Applications

Time: 10:30am to 1:00pm **Total Marks: 70**

Instructions:

1. **Attempt all questions.**
2. **Make suitable assumptions wherever necessary.**
3. **Figures to the right indicate full marks.**

Q.1	**(a)**	Explain the use of differential amplifier using three op-amps as instrumentation amplifier	**07**
	(b)	Define the terms: Slew rate, CMRR, input bias current and output offset voltage.	**07**
Q.2	**(a)**	Explain working of op-amp based Schmitt trigger circuit along with Schematic and input/output waveforms.	**07**
	(b)	Draw & explain the basic integrator circuit. What are the problems with it? Modify the circuit to obtain practical integrator & prove that it solves the problem of basic integrator circuit.	**07**
		OR	
	(b)	Draw & explain the basic differentiator circuit. What are the problems associated with it? Modify the circuit to obtain practical differentiator & prove that it solves the problem of basic differentiator circuit.	**07**
Q.3	**(a)**	Explain the following application of op-amp (1) Small signal Half wave rectifier (2) Peak Detector	**07**
	(b)	Draw basic log amplifier using a transistor. Derive the expression for output voltage	**07**
		OR	
Q.3	**(a)**	Explain the application of op-amp as a positive and negative clipper circuit.	**07**
	(b)	Prove that V0/V1=a*b/1+b[((1+a)/(1+c)]	**07**

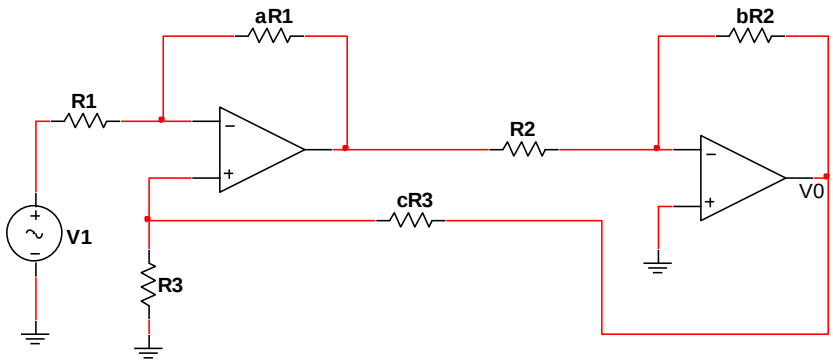

Q.4	**(a)**	Design and explain first order low pass Butterworth filter at cut-off frequency of 1 KHz with pass band gain of 2.Draw circuit with component value.	**07**
	(b)	Classify filters with four basic types. Explain ideal and practical characteristics of all. Draw attenuation characteristics also.	**07**
		OR	
Q.4	**(a)**	Discuss magnitude and frequency scaling in filter design.	**07**

	(b)	Sketch Delyiannis-Friend circuit and obtain its transfer function.	**07**
Q.5	**(a)**	Explain working of 555 timer based monostable multivibrator. Design the same for the output pulse width of 10 ms.	**07**
	(b)	What are the different types of voltage regulators? Discuss LM317 based adjustable voltage regulator. Indicate bypass capacitors to improve transient response and protective diodes in the connection diagram.	**07**

OR

Q.5	**(a)**	What is PLL? Explain operation of PLL with basic blocks.	**07**
	(b)	State the applications of operational transconductance amplifier and explain any one with necessary circuit and derivation	**07**

****