Seat No.: _____ Enrolment No._____

GUJARAT TECHNOLOGICAL UNIVERSITY

BE - SEMESTER–V EXAMINATION – WINTER 2015

Subject Code: 151905 **Date:11/12/2015**

Subject Name: Machine Design-1

Time: 10:30am to 1:00pm **Total Marks: 70**

Instructions:

1. **Attempt all questions.**
2. **Make suitable assumptions wherever necessary.**
3. **Figures to the right indicate full marks.**

Q.1 **(a)** Explain design considerations for casting with neat sketches. **07**

(b) Explain the following terms: **07**

(i) Preferred numbers (ii) Standardization (iii) Endurance limit (iv) Hertz's Contact stress (v) Creep (vi) Autofrettage (vii) Notch sensitivity

Q.2 **(a)** The following data is given for a 360^0 hydrodynamic bearing. **07**

Radial load=3.2 kN, Journal speed=1490 rpm, journal diameter=50mm, bearing length=50 mm, radial clearance=0.05mm, viscosity of lubricant = 25 cP. Assuming that the total heat generated in the bearing is carried by the total oil flow in the bearing, calculate

(i) Coefficient of friction (ii) Power lost in friction

(iii) Minimum oil film thickness (iv) Flow requirement in 1 liter/minute.

(v) Temperature rise.

$\frac{l}{d}$	s	$\frac{h_0}{c}$	$\left(\frac{r}{c}\right)f$	$\left(\frac{Q}{rcn_s l}\right)$
1	0.264	0.6	5.79	3.99
	0.121	0.4	3.22	4.33

(b) A ball bearing is subjected to a radial load of 5 kN, is expected to have a life of 8000 hours at 1450 rpm with a reliability of 99%. Calculate the dynamic load capacity of the bearing, so that it can be selected from the manufacturer's catalogue based on a reliability of 90%. **07**

OR

(b) Explain the following: **07**

(i) Soderberg diagram for fatigue loading.

(ii) Design for ergonomics.

Q.3 **(a)** Two concentric springs made of same material, for a valve gear mechanism in an aircraft engine. The maximum load on the spring is 6500 N. The deflection under the load should not exceed 40 mm. The permissible shear stress for the spring material is 600 N/mm^2. Take the spring index for both springs as 6 and modulus of rigidity as 0.8 X10^5 N/mm^2. Find main dimensions of the spring by assuming a standard clearance. **07**

(b) Define the following terminology related to helical spring with neat sketch: **07**

(a) Spring index (b) spring stiffness (c) Pitch (d) Wahl's stress factor

(d) Free length (e) solid length (f) surge in spring.

OR

Q.3 **(a)** A semi-elliptical leaf spring is to carry a load of 5000 N and consists of 8 leaves 46 mm wide, two of the leaves being full length. The spring is to be made 1000 mm between the eyes and is held at the center by 60 mm wide band. Assume that spring is initially stressed so as to induce an equal stress of 500 N/mm^2 when fully loaded. Design the spring giving (a) thickness of leaves (b) eye diameter (c) length of leaves (d) Maximum deflection and camber. Assume E= 2.1 X 10^5 N/mm^2. **07**

(b) (a) Give detailed classification of spring. List the materials for helical and leaf Spring. **03**

(b) What is nipping in a leaf spring? Discuss its role. Derive equation for finding nipping in spring. **04**

Q.4 **(a)** A centrifugal clutch is to be designed to transmit 15 kW at 900 rpm. The shoes are four in number. The speed at which the engagement begins is $3/4^{th}$ of the running speed. The inside radius of pulley rim is 150 mm. The shoes are lined with ferrodo for which the coefficient of friction may be taken as 0.25. Determine: 1. Mass of the shoe and 2. Size of the shoes. **07**

(b) Explain the construction and working of internal expanding shoe brake with neat sketch. Also derive the equation for finding braking torque in shoe brake. **07**

OR

Q.4 **(a)** A simple band brake as shown in figure1. The brake drum is 0.75m in diameter and is fitted with a steel band 4 mm thick lined with brake lining having a co-efficient of friction of 0.25 when not sliding. The arc of contact is 245^0. This brake drum is attached to a 0.60 m hoisting drum that sustains a rope load of 8200 N. The operating force has a moment arm of 1.5 mm and the band is attached 0.125 m from the pivot point. **07**

(i) Determine the force required to just support the load.

(ii) What force will be required if the direction of rotation is reversed.

(iii) What width of steel band is required if the tensile stress is limited of 52.5 N/mm^2.

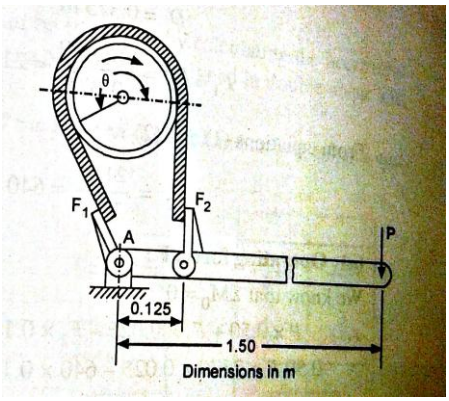

Figure 1

(b) (i) State and explain the stresses induced in steel wires ropes. **04**

(ii) State advantages of chain drives over belt drives. **03**

Q.5 **(a)** A closed vessel is to be designed to withstand an internal pressure of 50MPa having inside diameter of 430 mm. Following properties may be assumed: **07**

Yield strength=300MPa, Ultimate tensile strength=500 MPa, Poisson's ratio=0.3. Estimate the wall thickness required by using a factor of safety 1.5 based on yield strength on the basis of:

(i) Maximum Principle stress theory

(ii) Maximum Shear stress theory

(iii) Maximum Principle strain theory.

	(b)	**(a)** Draw the stress distribution diagrams for thick cylinder subjected to internal and external pressure.	**04**
		(b) Classify the pressure vessels. Also write equations for design of thick cylindrical shell subjected to internal pressure with usual notations.	**03**

OR

Q.5	**(a)**	Explain in detail the selection procedure of V belts from the catalogue of the manufacturer.	**07**
	(b)	It is required to design a chain drive to connect a 12 kW, 1400 rpm electric motor to a centrifugal pump running at 700 rpm. The service conditions involve moderate shocks. (i) Determine pitch circle diameter of driving and driven sprockets (ii) Determine number of chain links (iii) Specify the correct center distance between the axes of sprockets. Assume suitable data if any required	**07**

****