Seat No.: _____ Enrolment No._____

GUJARAT TECHNOLOGICAL UNIVERSITY

BE – SEMESTER – VI EXAMINATION – WINTER 2015

Subject Code:161901 **Date:15/12/ 2015**

Subject Name: Dynamics of Machinery

Time:2:30pm to 5:00pm **Total Marks: 70**

Instructions:

1. **Attempt all questions.**
2. **Make suitable assumptions wherever necessary.**
3. **Figures to the right indicate full marks.**

Q.1 **(a)** For uncoupled two cylinder locomotive engine, explain the following terms: **07**
(i) Hammer blow (ii) Swaying couple (iii) Variation in tractive force

(b) Four masses 150 kg, 200 kg, 100 kg and 250 kg are attached to a shaft revolving at radii 150 mm, 200 mm, 100 mm and 250 mm ; in planes A, B, C and D respectively. The planes B, C and D are at distances 350 mm, 500 mm and 800 mm from plane A. The masses in planes B, C and D are at an angle 105° , 200° and 300° measured anticlockwise from mass in plane A. It is required to balance the system by placing the balancing masses in the planes P and Q which are midway between the planes A and B, and between C and D respectively. If the balancing masses revolve at radius 180 mm, find the magnitude and angular positions of the balance masses. **07**

Q.2 **(a)** Explain the procedure for balancing multi-cylinder radial engines by direct and reverse cranks method. **07**

(b) For a twin V-engine the cylinder centerlines are set at 90°. The mass of reciprocating parts per cylinder is 2.5 kg. Length of crank is 100 mm and length of connecting rod is 400 mm. Determine the primary and secondary unbalanced forces when the crank bisects the lines of cylinder centerlines. The engine runs at 1000 rpm. **07**

OR

(b) Explain about 'primary' and 'secondary' balancing of reciprocating masses. A single cylinder reciprocating engine has speed 240 rpm, stroke 300 mm, mass of reciprocating parts 50 kg, mass of revolving parts at 150 mm radius 30 kg. If all the mass of revolving parts and two-third of the mass of reciprocating parts are to be balanced, find the balance mass required at radius of 400 mm and the residual unbalanced force when the crank has rotated 60° from IDC. **07**

Q.3 **(a)** A mass m guided in the X-X direction is connected by a spring configuration as shown in fig 1.0 Set up the equation of motion of mass 'm' and find the natural frequency of vibration of the mass. **07**

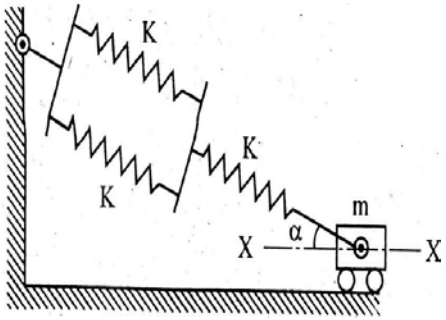

Fig 1.0

(b) A barrel of Bofors military gun as shown in fig recoils against a spring of stiffness of 160 N/m on firing. At the end of the recoils a dash- pot critically damped is engaged that allows to return to its initial position in minimum time without oscillation. A gun barrel has mass of 400 kg and the barrel recoils 1m on firing, Find the equation of return motion. Also find: (i) Critical damping coefficient. **07**
(ii) Initial velocity of the barrel at firing.

(iii) Time taken by the barrel to return 1 cm away from initial position.

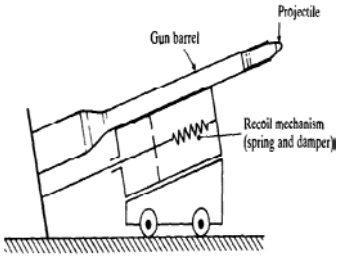

Fig 2.0

OR

Q.3 **(a)** Find the natural frequency of system shown in fig 3.0.If m, K_1, K_2, L are fixed, find the value of 'b' for which the system will not vibrate. **07**

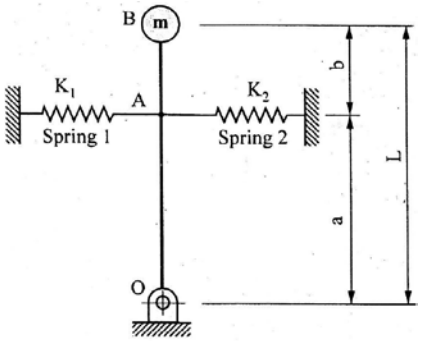

Fig 3.0

(b) An electric motor is supported on a spring and dashpot. The spring has a stiffness 5000 N/m and dashpot offers a resistance of 300 N at 2.5 m/s. The unbalanced mass of 1.5 kg rotates at 50 mm radius and total mass of electric motor is 50 kg. If the motor runs at 340 r.p.m.; Determine: (i) the damping factor; (ii) the amplitude of steady state vibrations; (iii) the phase angle; (iv) the resonance speed; (v) the amplitude of resonance; (vi) The resultant force exerted by spring and dashpot on the motor. **07**

Q.4 **(a)** The mass moment of inertia of three rotors A, B, and C are 400 kg-m^2, 160 kg-m^2, and 10 kg-m^2 respectively. The distance between A and B is 2 m and they are connected by a shaft of 50 mm diameter. The distance between rotor B and C is also 2m and they are connected by as shaft of 25 mm diameter. Assuming G= 80 kN/mm^2. Calculate :(i) Natural frequencies of torsional vibrations and (ii) Position of the nodes. **10**

(b) Explain tosionally equivalent shaft. **04**

OR

Q.4 **(a)** Explain the Forced vibration with rotating Unbalance. **07**

(b) A shaft of negligible weight 6 cm diameter and 5 metres long is simply supported at the ends and carries four weights 50 kg each at equal distance over the length of the shaft. Find the frequency of vibration by Dunkerley's method. Take $E = 2 \times 10^6$ kg/cm^2. **07**

Q.5 **(a)** Explain Derive an expression for critical speed of a shaft carrying rotor and without damping. **07**

(b) A horizontal shaft of 10 mm diameter is simply supported at both ends by bearings. A rotor of mass 5 Kg is attached at middle of the horizontal shaft. The span between two bearing is 500 mm. The center gravity of the rotor is 2.5 mm offset from the geometric center of the rotor. The equivalent viscous damping at the center of the rotor-shaft may be taken as 52 Ns/m. Find the deflection of the shaft and critical speed of the shaft. **07**

OR

Q.5 **(a)** For the system shown in fig, find out the fundamental natural frequency of vibration using Stodola Method. Carry out two iterations. Take $E=1.96\times10^{11}$ N/m^2 and $I=4\times10^{-7}$ m^4. **07**

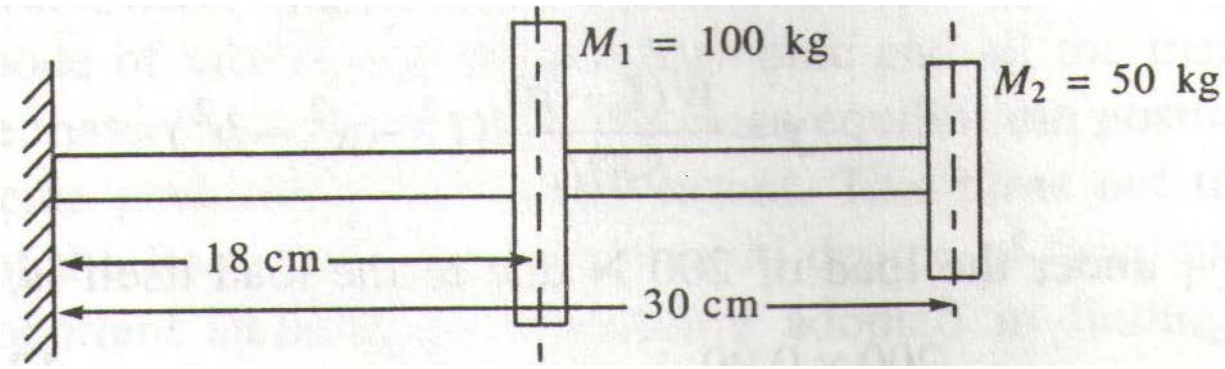

(b) Explain any one vibration measuring instruments in brief. **07**

****