Seat No.: _____ Enrolment No._____

GUJARAT TECHNOLOGICAL UNIVERSITY

BE – SEMESTER – VI EXAMINATION – WINTER 2015

Subject Code:161905 **Date:10/12/ 2015**

Subject Name: Control Engineering

Time:2:30pm to 5:00pm **Total Marks: 70**

Instructions:

1. **Attempt all questions.**
2. **Make suitable assumptions wherever necessary.**
3. **Figures to the right indicate full marks.**

Q.1 (a) (1) List important characteristics of the transfer function. **03**

(2) Use of feedback makes the system response sensitive to disturbances. Evaluate with appropriate reasons. **02**

(3) "If an oscillating force is applied to a MSD system, oscillations will result in steady state." State whether the statement is true or false? Justify your answer with appropriate reason. **02**

(b) A temperature control system of an electrical resistance furnace operates by measuring temperature using thermocouple, sensing the difference between the thermostat setting and the actual temperature and then adjusting electric supply an amount proportional to this difference. **07**

Draw a functional closed-loop block diagram of the above physical system showing the reference input, feedback element, the controller and control (manipulated) variable, the plant and output.

Q.2 (a) 1) Differentiate the following:

a) Physical model versus Mathematical model **02**

b) Linear time invariant versus Linear time varying systems **02**

c) Lumped Parameter system versus Distributed parameter system. **03**

(b) Simplify the block diagram shown in figure. Obtain the transfer function relating C(s) and R(s). **07**

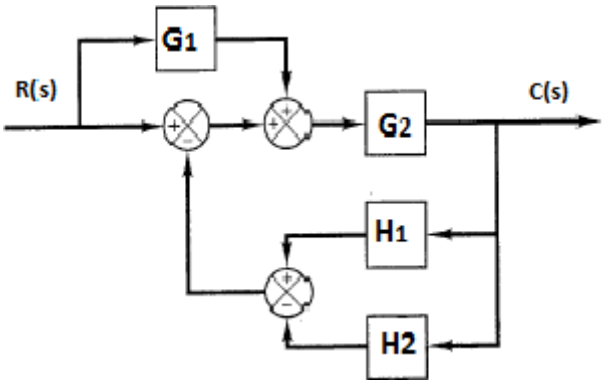

OR

(b) Find the transfer function $Y_7(s)/Y_1(s)$ for the system shown in figure below using Mason's gain formula **07**

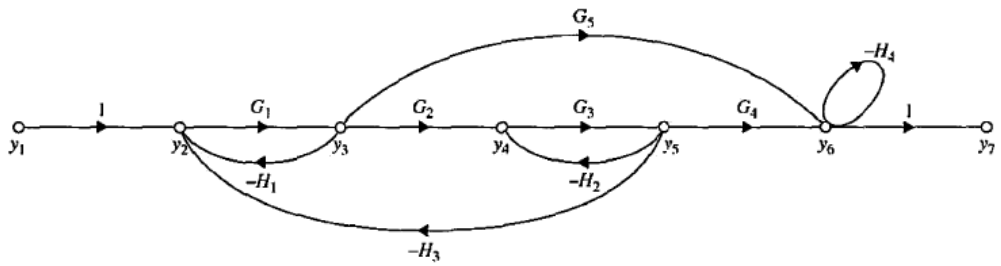

Q.3 **(a)** Obtain the transfer function of $X_1(s)/U(s)$ and $X_2(s)/U(s)$ of the mechanical system shown below: **07**

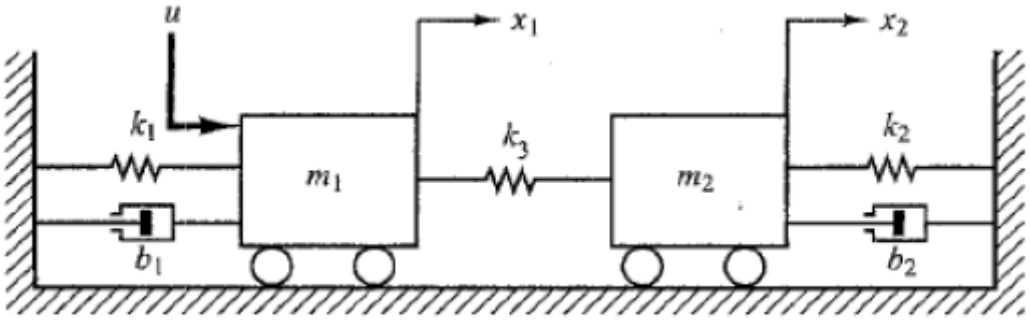

(b) Write the governing differential equations for the electrical system shown in figure given below. Obtain the transfer function $[E_{o(s)}/E_{i(s)}]$. **07**

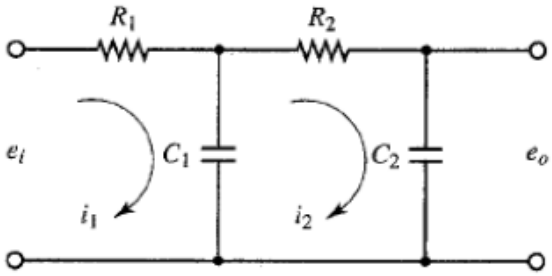

OR

Q.3 **(a)** Figure shows the process plant comprising of two tanks- Tank 1(located at top) & Tank 2 (located at bottom) filled with liquid level, capacitance and resistance as shown. The inflow steady state rate to Tank 1 is Q1. Assuming that Tank 2 does not load Tank 1 and assuming laminar flow conditions, **07**

1) Derive the mathematical equations of the system – i.e. process plant.
2) Obtain the transfer function $[H_2(s)/Q_1(s)]$.
3) Obtain the elements of the block diagram for each of the equation and then by connecting signals properly construct the block diagram of the system.
4) Reduce the block diagram to finally represent the transfer function relating $H_2(s)$ and $Q_1(s)$.

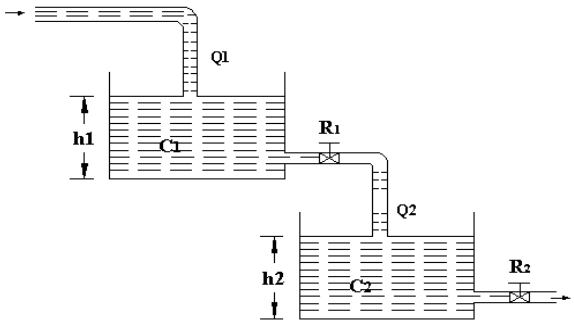

(b) For mechanical system shown below, write the differential equations governing the system. Obtain its transfer function. Obtain electrical analog based on force-voltage analogy, clearly proving how and why the analogy is established. Draw the Force-Voltage analogous electrical network. **07**

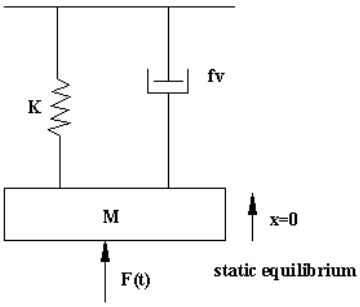

Q.4 **(a)** Explain the control action of a Proportional-plus-Integral-plus-Derivative controller. Explain advantages of combining the control actions. Substantiate your answer with the system equation, block diagram of control action and typical response characteristics of the PID controller. **07**

(b) A RC circuit is tested with unit-step input signal. Derive the unit-step response and plot the unit-step response curve for the same. Comment on the unit-step response in the light of transient response and steady-state response. **07**

OR

Q.4 **(a)** With the help of a suitable example explain the control action of the Two-position or On-Off controller with differential gap. Substantiate your answer with the system equation, block diagram of control action and typical response characteristics of On-Off controller. **07**

(b) (i) Define the terms Rise time and Maximum Overshoot with reference to transient response specifications of second order system using neat sketch. **03**

(ii) With the help of appropriate graphs show the effects of damping factor (ξ) on the response of linear time-invariant second order system. Comment on the system response for $\xi<1$, $\xi=1$ and $\xi>1$. **04**

Q.5 **(a)** Draw and explain the block diagram of PLC. Also state advantages and disadvantages of PLC system. **07**

(b) Compare hydraulic, pneumatic and mechanical power transmission. Comment and compare the degree of control exercised by each of them. **07**

OR

Q.5 **(a)** (i) What is fuzzy control? Explain in brief. State its applications in practice. **03**

(ii) What is adaptive control? Explain in brief. State its applications in practice. **03**

(iii) What are the limitations of Routh's stability criterion? **01**

(b) (i) What are servo systems? Explain construction and working of a mechanical servo control valve. **03**

(ii) With the help of a neat sketch, explain construction and working of an oil hydraulic proportional control valve. Also draw the hydraulic symbol of the proportional valve. **04**

****