Seat No.: _____ Enrolment No._____

GUJARAT TECHNOLOGICAL UNIVERSITY

BE - SEMESTER–VII EXAMINATION – WINTER 2015

Subject Code: 172501 **Date:12/12/2015**

Subject Name: Computer Aided manufacturing

Time: 10:30am to 1:00pm **Total Marks: 70**

Instructions:

1. **Attempt all questions.**
2. **Make suitable assumptions wherever necessary.**
3. **Figures to the right indicate full marks.**

Q.1	**(a)**	Discuss the advantages and limitations of employing CNC machines over manual machines.	**07**
	(b)	Explain with suitable example 'Opitz' coding system.	**07**
Q.2	**(a)**	Explain robot configuration with neat sketch.	**07**
	(b)	What are the basic components of NC system? Briefly discuss the functions of each component.	**07**
		OR	
	(b)	What do you understand by NC coding? Explain ISO & ESI standard codes for NC coding.	**07**
Q.3	**(a)**	Explain different sensors used in Robot with neat sketch.	**07**
	(b)	What is CIM wheel? Explain with neat sketch.	**07**
		OR	
Q.3	**(a)**	Compare variant & generative process planning methodologies.	**07**
	(b)	List & explain different types of AGVs with neat sketch.	**07**
Q.4	**(a)**	What is Mechatronics? With suitable example explain the role of Mechatronics in Manufacturing.	**07**
	(b)	Write the manual part programme for profile milling of the part shown in figure-1. Assume plate thickness to be 10mm. Refer Table -1 for 'G' codes & 'M' codes	**07**
		OR	
Q.4	**(a)**	Write the manual part programme for the part shown in figure-2. Assume that the raw material is cylindrical blank size Ø 60mm X 110mm. Refer Table -1 for 'G' codes & 'M' codes	**07**
	(b)	List types of Rapid Prototyping Processes & explain "Fused Deposition Modeling (FDM)" with neat sketch.	**07**
Q.5	**(a)**	Discuss the salient features of point to point, straight line and contouring CNC system.	**07**
	(b)	Discuss advantages & disadvantages of using a ball screw & nut assembly in CNC machines.	**07**
		OR	
Q.5	**(a)**	What are the fixed cycles? What is the difference between a fixed cycle & a subroutine? Discuss how a fixed cycle can be useful in writing a part programme.	**07**

(b) Discuss the different statements used to write a part programme using APT. **07**

CNC G codes

G00 - Positioning at rapid speed; Mill and Lathe
G01 - Linear interpolation (machining a straight line); Mill and Lathe
G02 - Circular interpolation clockwise (machining arcs); Mill and Lathe
G03 - Circular interpolation, counter clockwise; Mill and Lathe
G04 - Mill and Lathe, Dwell
G20 - Inch units; Mill and Lathe
G21 - Metric units; Mill and Lathe
G40 - Cancel diameter offset; Mill. Cancel tool nose offset; Lathe
G41 - Cutter compensation left; Mill.
G42 - Cutter compensation right; Mill.
G43 - Tool length compensation; Mill
G44 - Tool length compensation cancel; Mill (sometimes G49)
G90 - Absolute programming
G91 - Incremental programming
G92 - Reposition origin point; Mill
G92 - Thread cutting cycle; Lathe
G94 - Per minute feed; Mill
G95 - Per revolution feed; Mill

CNC M Codes

M00 - Program stop; Mill and Lathe
M01 - Optional program stop; Lathe and Mill
M02 - Program end; Lathe and Mill
M03 - Spindle on clockwise; Lathe and Mill
M04 - Spindle on counterclockwise; Lathe and Mill
M05 - Spindle off; Lathe and Mill
M08 - Coolant on; Lathe and Mill
M09 - Coolant off; Lathe and Mill
M30 - Program end, return to start; Lathe and Mill
M97 - Local sub-routine call; Lathe and Mill
M98 - Sub-program call; Lathe and Mill
M99 - End of sub program; Lathe and Mill

Table-1 (G codes & M codes for CNC part Programme)

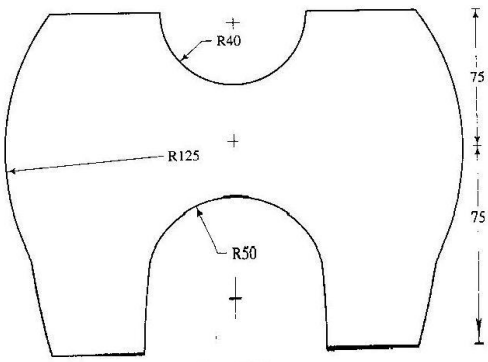

Figure-1, Q. 4 (b)

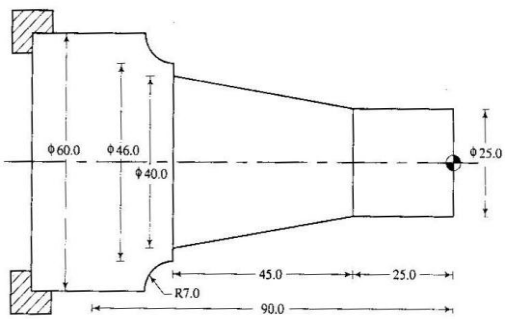

Figure-2, Q. 4 (a) OR