Seat No.: _____ Enrolment No._____

GUJARAT TECHNOLOGICAL UNIVERSITY

BE - SEMESTER–VIII EXAMINATION – WINTER 2015

Subject Code:180503 **Date:/2015**

Subject Name: Process Simulation & Optimization

Time: 2:30pm to 5:00pm **Total Marks: 70**

Instructions:

1. **Attempt all questions.**
2. **Make suitable assumptions wherever necessary.**
3. **Figures to the right indicate full marks.**

Q.1 **(a)** Explain equation oriented approach for simulation with example. **07**

(b) Give the names of at least two numerical methods to solve (1) Algebraic equations and (2) Ordinary differential equations. Explain any one method in detail. **07**

Q.2 **(a)** Explain any one tearing algorithm for modular based simulation. **07**

(b) Briefly explain the partitioning procedure and then partition the block diagram shown in figure 1, starting with block 4. **07**

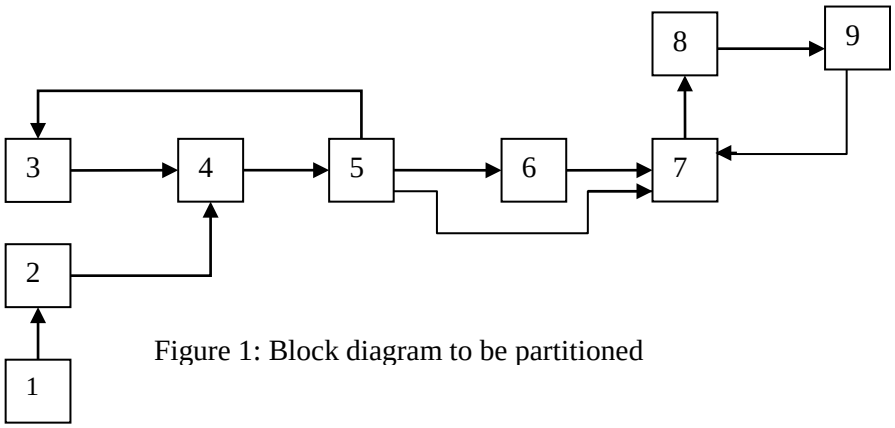

Figure 1: Block diagram to be partitioned

OR

(b) For given six equations f_1 to f_6 in six variables x_1 to x_6 as shown in figure 2 draw directed graph and carry out partitioning. **07**

$$
\begin{array}{c}
 \\ f_1 \\ f_2 \\ f_3 \\ f_4 \\ f_5 \\ f_6
\end{array}
\begin{array}{c}
\begin{array}{cccccc} x_1 & x_2 & x_3 & x_4 & x_5 & x_6 \end{array} \\
\begin{bmatrix}
1 & & & & 1 & 1 \\
 & & 1 & 1 & & \\
 & 1 & & & 1 & \\
 & 1 & 1 & 1 & & \\
1 & & & & 1 & \\
 & & & & 1 & 1
\end{bmatrix}
\end{array}
$$

Figure 2: Incidence matrix with defined output variables

Q.3 **(a)** What are the applications of optimization in chemical process and plants? Explain any one in detail with example. **07**

(b) What is Hessian matrix? Write down its application in optimization. Determine whether the following function is convex or concave: **07**

$$f(x) = 4x_1^2 + 3x_2^2 + 5x_3^2 + 6x_1x_2 + x_1x_3 - 3x_1 - 2x_2 + 15$$

OR

Q.3 **(a)** Write a short note on degrees of freedom analysis. **07**

(b) Consider a chemical plant with three products (E, F, G) and three raw materials (A, B, C) in limited supply. Each of three products is produced in a separate process (1, 2, 3) as shown in following figure 3. **07**

Process 1: A + B → E, Process 2: A + B → F , Process 3: 3A + 3B + C → G

Raw Material	Maximum Available, kg/day	Cost, Rs/kg
A	40000	0.015
B	30000	0.02
C	25000	0.025

Process	Product	Reactant requirement Kg/kg product	Processing cost Rs/kg	Selling Price Rs/kg
1	E	(2/3)A, (1/3)B	0.015	4.0
2	F	(2/3)A, (1/3)B	0.005	3.3
3	G	(1/2)A, (1/6)B (1/3)C	0.01	3.8

Formulate the objective function to maximize the total operating profit per day in the units of Rs/day.

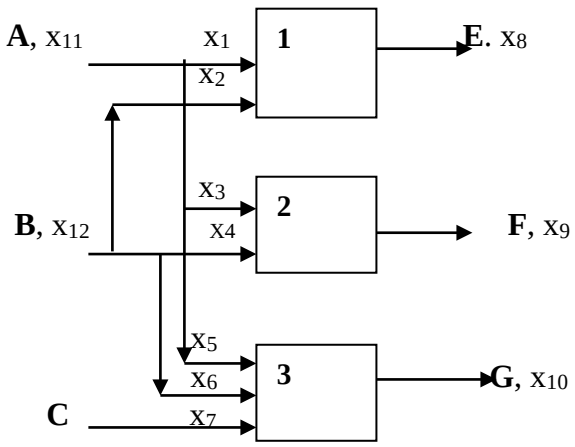

Figure 3: Flow diagram for multiproduct plant

Q.4 **(a)** Explain in detail steepest descent method. **07**

(b) Use method of Lagrange multipliers to: **07**

$$\text{Minimize: } f(x) = 4x_1^2 + 7x_2^2$$

$$\text{Subject to: } h(x) = 0 = x_1 + 5x_2 - 3$$

OR

Q.4 **(a)** What is linear programming problem? State the linear programming problem in standard form and write down its application in chemical industries. **07**

(b) Minimize a non-quadratic function $f(x) = x^4 - x + 1$ using the Newton Raphson method. For a starting point of x = 3, minimize f(x) until the change in x is less than 10^{-3}. **07**

Q.5 **(a)** Derive formula to calculate optimal pipe diameter and optimal velocity for an incompressible fluid. **07**

(b) Locate the stationary points of the following function and determine its character: **07**

$$y = 2x_1^2 + 3x_2^2 - 8x_1 - 12x_2 + 10$$

OR

Q.5	**(a)**	Briefly discuss optimal shell and tube heat exchanger design.	**07**
	(b)	Explain the simplex method to solve linear programing problem.	**07**

****