Seat No.: _____ Enrolment No._____

GUJARAT TECHNOLOGICAL UNIVERSITY

BE - SEMESTER–III (New) EXAMINATION – WINTER 2015

Subject Code:2133405 **Date:02/01/2016**

Subject Name: Manufacturing and Assembly Drawing

Time: 2:30pm to 5:00pm **Total Marks: 70**

Instructions:

1. **Attempt all questions.**
2. **Make suitable assumptions wherever necessary.**
3. **Figures to the right indicate full marks.**

			MARKS
Q.1		**Short Questions**	**14**
	1	Draw the convention for External Thread _____	
	2	Draw the convention for Bevel gear _____	
	3	Draw the convention for Leaf Spring _____	
	4	Draw the convention for Straight Knurling _____	
	5	Write the abbreviation for Material _____	
	6	Write the abbreviation for Meter _____	
	7	Write the abbreviation for Centre Line _____	
	8	Write the abbreviation for Assembly _____	
	9	Write the abbreviation for Diameter _____	
	10	Write the abbreviation for Round _____	
	11	Draw the symbol for Fillet weld _____	
	12	Draw the symbol for Single bevel butt weld_____	
	13	Draw the symbol for Plug weld _____	
	14	Draw the symbol for Fillet weld _____	
Q.2	**(a)**	Differentiate between Lap Joint and Butt Joint.	**03**
	(b)	Differentiate between chain riveting and zig - zag riveting.	**04**
	(c)	Draw to 1:1 scale, the top view and sectional front view of a single riveted lap joint. The thickness of plates is 9 mm. show at least three rivets in each row. Indicate all dimensions. Use snap head rivets.	**07**
		OR	
	(c)	Describe basic shaft system with the help of a suitable example	**07**
Q.3	**(a)**	Define fit. What are the different types of fits?	**03**
	(b)	Explain about different types of fits.	**04**
	(c)	The dimensions of a shaft and hole are: Basic Shaft size =60 mm and given as $60^{-0.02}$ & Basic hole size =60 mm and given as $60^{-0.005}$ find i) Tolerance of Shaft, ii) Tolerance of Hole, iii) Max Allowance, v) Min allowance, iv) Type of Fit.	**07**
		OR	
Q.3	**(a)**	Draw the symbols for i) Cylindricity, ii) Angularity, iii) Runout.	**03**
	(b)	What are the effects of alloying addition like Mn, Cr, and Mo to steel?	**04**
	(c)	Write a short note on copper and copper alloys.	**07**
Q.4	**(a)**	What is the importance of surface roughness?	**03**
	(b)	What is meant by direction of lay?	**04**
	(c)	Sketch the symbols related to the common direction of lay.	**07**
		OR	
Q.4	**(a)**	Define Production drawing of a component. What is the importance of Production drawing?	**03**
	(b)	What are the different types of production drawing? Explain.	**04**

	(c)	Interpret the production drawing shown in fig1.	**07**
Q.5		Fig 2 shows the parts of a screw jack. Assemble the parts and draw the half sectional view from the front.	**14**

OR

Q.5	**(a)**	What is an injection mould?	**03**
	(b)	What are the different parts of an Injection mould?	**04**
	(c)	Draw a two plate injection mould for two cavity cup dimensions external diameter 30 mm, height 15 mm, wall thickness 2 mm. List out Bill of Material.	**07**

****

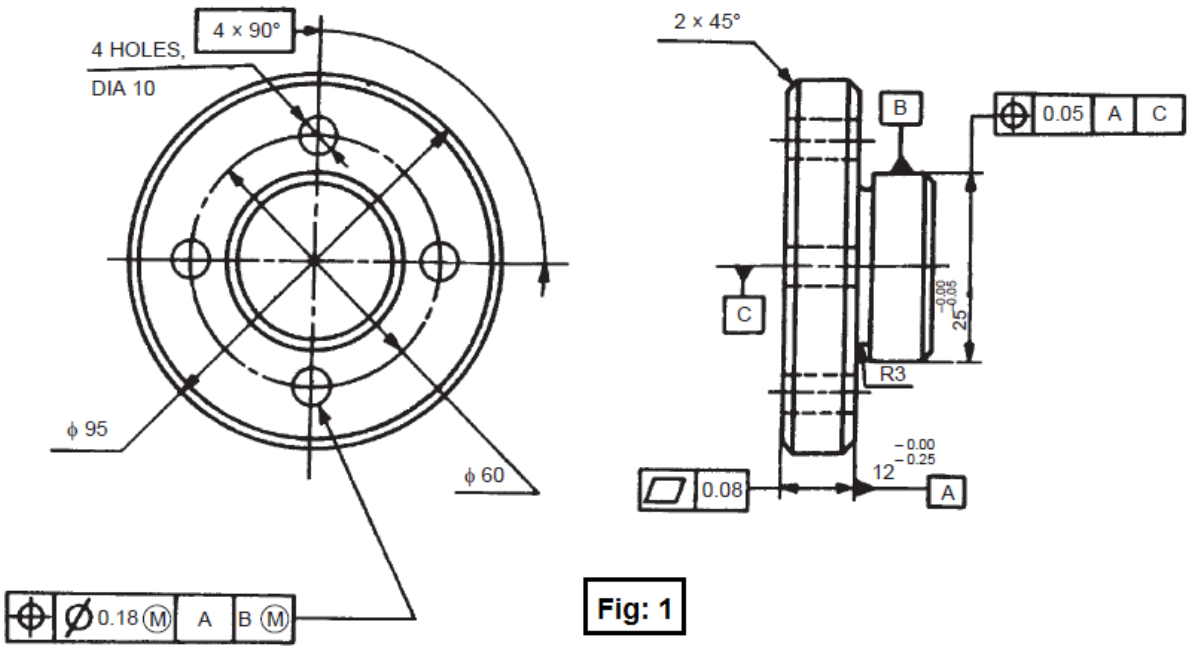

Fig: 1

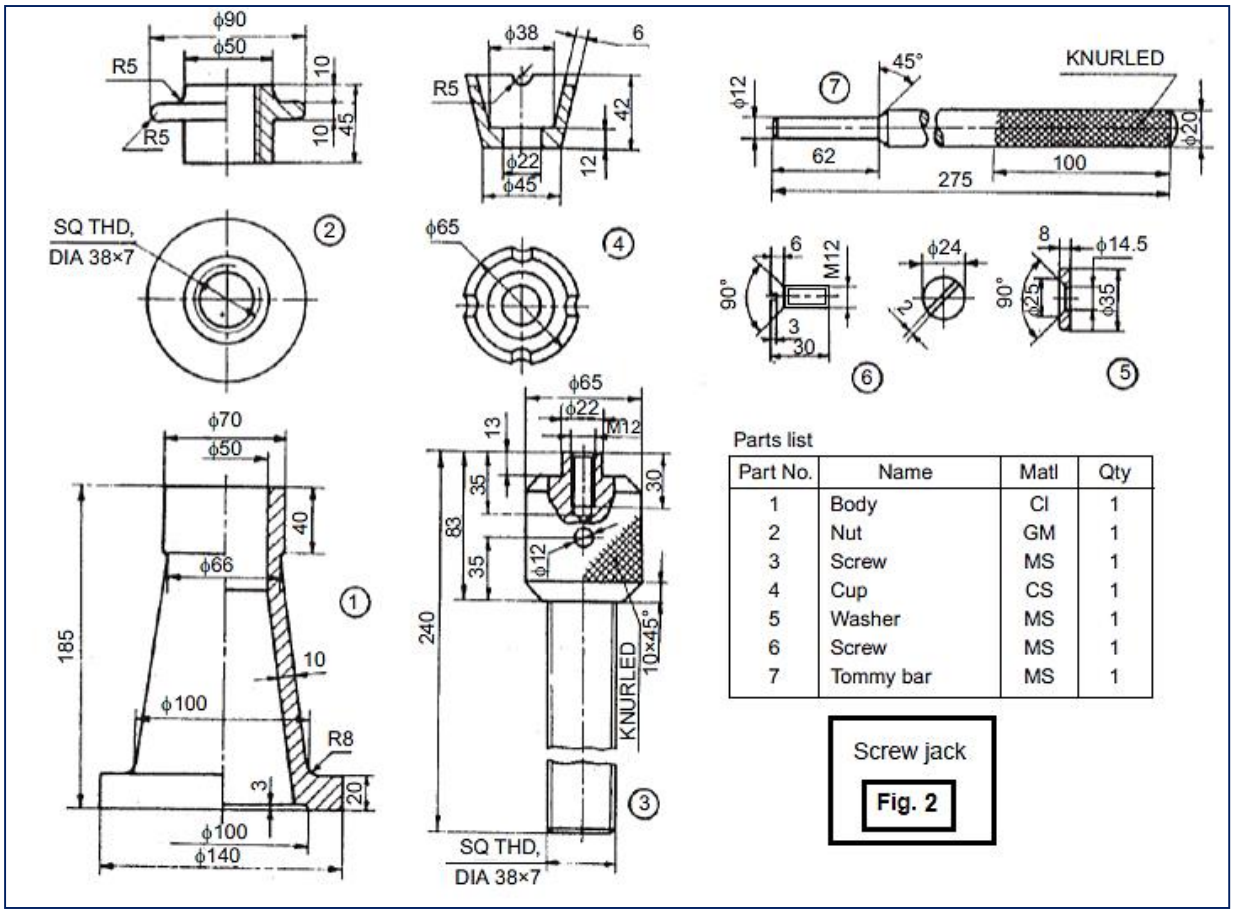

Parts list

Part No.	Name	Matl	Qty
1	Body	CI	1
2	Nut	GM	1
3	Screw	MS	1
4	Cup	CS	1
5	Washer	MS	1
6	Screw	MS	1
7	Tommy bar	MS	1

Screw jack

Fig. 2