Seat No.: _____ Enrolment No._____

GUJARAT TECHNOLOGICAL UNIVERSITY

BE - SEMESTER–IV (New) EXAMINATION – WINTER 2015

Subject Code:2140307 **Date:01/01/2016**

Subject Name: Control System & Analysis

Time: 2:30pm to 5:00pm **Total Marks: 70**

Instructions:

1. **Attempt all questions.**
2. **Make suitable assumptions wherever necessary.**
3. **Figures to the right indicate full marks.**

Q.1 **(a)** A feedback control system is represented by the differential equation, **07**

$$\frac{d^2c}{dt^2} + 6.4\frac{dc}{dt} = 160\,e, \quad where, e = r - 0.4\,c$$

The variable c denotes output. Find the value of the damping ratio and what information does this convey about the transient behavior of the system.

(b) The open loop transfer function of a unity feedback control system is $G(s) = \frac{100}{s(s+10)}$ and the input applied is $r(t) = a + bt + \frac{ct^2}{2}$. Obtain generalized error series. **07**

Q.2 **(a)** Determine the stability of the system given by characteristic equation, **07**

$$s^5 + s^4 + 2s^3 + 2s^2 + 3s + 15 = 0$$

(b) Determine the ratio C/D, C/R and the total output of the system shown below: **07**

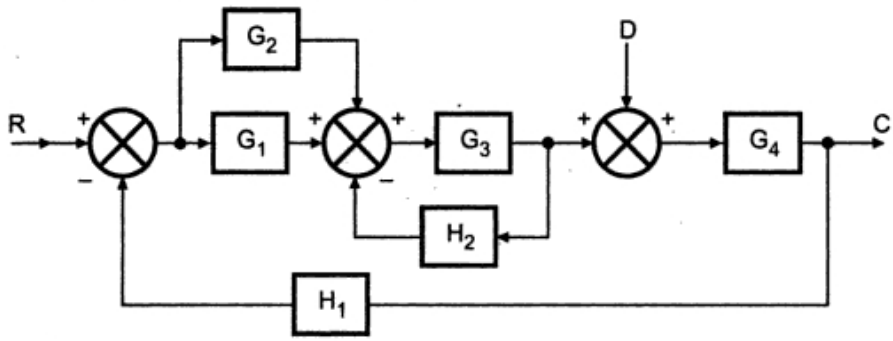

OR

(b) Obtain the transfer functions C_1/R_1 and C_2/R_1 of the below given system. **07**

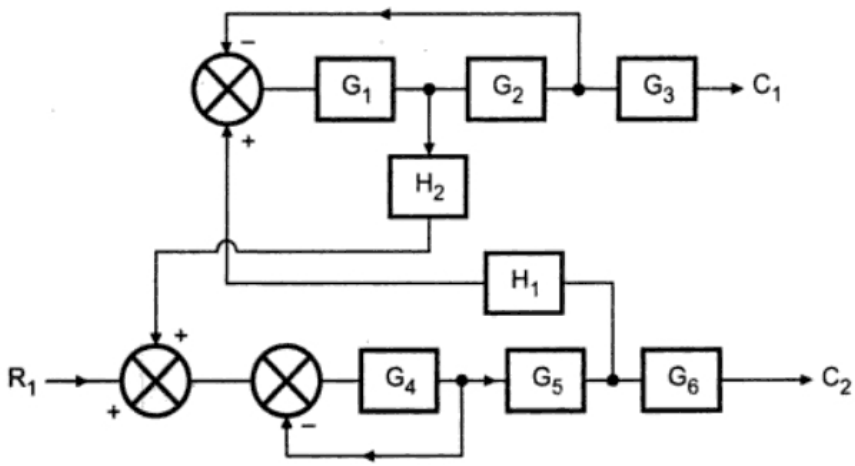

Q.3 (a) Draw signal flow graph for electrical network if the various branch currents are as shown in the figure. **07**

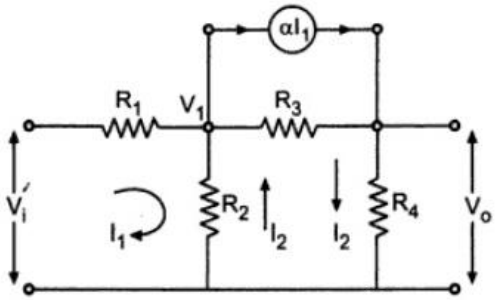

(b) A second order system is given by $\frac{C(s)}{R(s)} = \frac{25}{s^2 + 6s + 25}$. Find the rise time, peak time, peak overshoot and settling time if subjected to unit step input. Also calculate expression for its output response. **07**

OR

Q.3 (a) A D.C. motor drives a pointer of ECG pen-motor system, which is spring loaded, to return the reference position. If K_b = back *e.m.f.* constant, K_T = Torque constant, K_S = Spring constant, and J = Moment of Inertia. Find the transfer function of the system. **07**

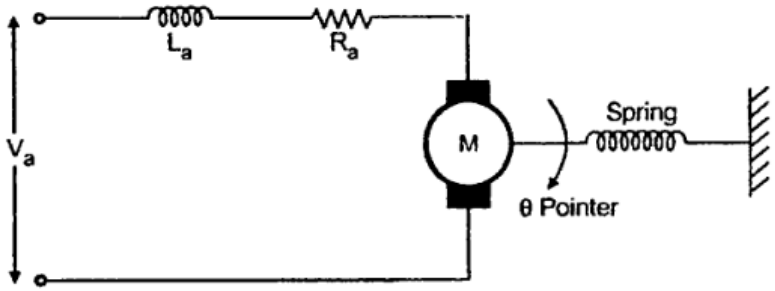

(b) Obtain the transfer function of the network shown in figure. **07**

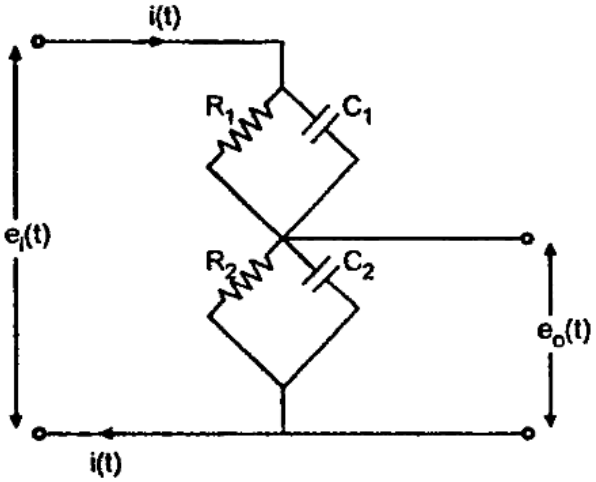

Q.4 (a) Plot the root locus of the system having **07**

$$G(s)H(s) = \frac{k}{s(s+4)(s^2+4s+20)}$$

Also obtain,

1. k for ξ = 0.707, (ii) k for ξ = 0.866 (iii) k for ξ = 1.

(b) Derive the transfer function from the given bode plot. **07**

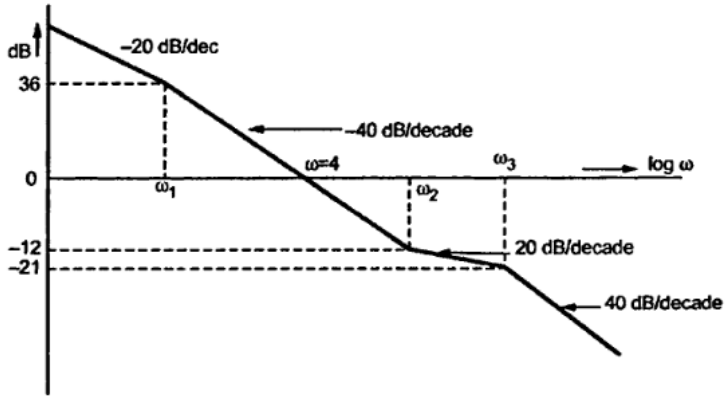

OR

Q.4 **(a)** Draw the complete root locus of the system having **07**

$$G(s)H(s) = \frac{k\,(s+5)}{(s^2+4s+20)}$$

(b) Obtain magnitude and phase plot of below given system. **07**

$$G(s)H(s) = \frac{4000(s+0.05)(s+4)}{s(s+1)(s+10)}$$

Also obtain,

1. Gain crossover frequency
2. Phase crossover frequency
3. Gain margin
4. Phase margin
5. Stability of the system

Q.5 **(a)** What are gain margin & phase margin? Determine these two analytically for a system with $G(s)H(s) = \frac{1}{s(s+1)(s+\frac{1}{2})}$ given that the gain crossover frequency is 0.82 rad/sec. Is the system stable? **07**

(b) Sketch the Nyquist plot for a system with the open loop transfer function, **07**

$$G(s)H(s) = \frac{k(1+0.5s)(1+s)}{(s-1)(1+10s)}$$

Determine the range of values of k for which the system is stable.

OR

Q.5 **(a)** **07**

If $G(s)H(s) = \frac{\left(1+\frac{s}{A}\right)^2}{s^3}$ determine the value of A, that gives the system a phase margin of 50˚.

(b) Determine the stability of the system using Nyquist criteria. **07**

$$G(s)H(s) = \frac{100(1+5s)}{s^4(1+s)}$$

****