Seat No.: _____ Enrolment No._____

GUJARAT TECHNOLOGICAL UNIVERSITY

BE - SEMESTER–IV (New) EXAMINATION – WINTER 2015

Subject Code:2141002 **Date:19/12/2015**

Subject Name: Analog Circuit Design

Time: 2:30pm to 5:00pm **Total Marks: 70**

Instructions:

1. **Attempt all questions.**
2. **Make suitable assumptions wherever necessary.**
3. **Figures to the right indicate full marks.**

Q.1	**(a)**	Draw the differential amplifier circuit using two op-amp. State advantage of one additional op-amp in that. Show how its output is related to input using necessary derivations.	**07**
	(b)	Design the wein bridge using JFET, to produce a sinusoid output of frequency 2KHz. The FET has g_m =2.5 ms and μ=35.	**07**
Q.2	**(a)**	Explain the working of Hartley oscillator. Derive the expression for frequency of oscillation.	**07**
	(b)	Derive the expression for current gain with resistive load using hybrid Π model.	**07**
		OR	
	(b)	The following low frequency parameters are known for a given transistor at Ic=1.3 mA, VCE= 10V at room temperature and the h-parameters are as follows. h_{fe}=50, h_{ie}=1100, h_{re}=2.5x10^{-4}, h_{oe}=24μA/V. At the same point f_T= 50 MHz and C_{ob}=3pF. Compute all the values of hybrid π parameters of CE transistor model.	**07**
Q.3	**(a)**	Explain the positive full wave rectifier using op-amp.	**07**
	(b)	Draw the hybrid Π common emitter transistor model. Also derive the expression for input conductance.	**07**
		OR	
Q.3	**(a)**	Explain working of 555 timer based Monostabe multivibrator. Design the same for the output pulse width of 10 ms.	**07**
	(b)	Prove that output is integral function of Input.	**07**

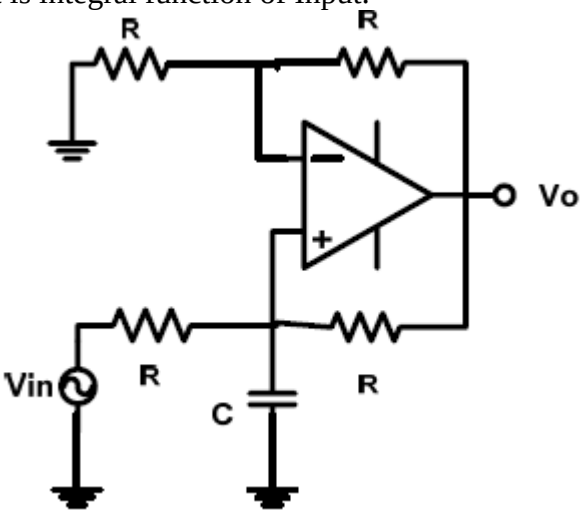

Q.4	**(a)**	Explain the basic differentiator using an op-amp. What are the problems associated with this configuration? How they are overcome?	**07**

	(b)	Explain how op-amp can be used to generate free running square wave with necessary circuit diagram and waveforms. Show how time period can be calculated.	**07**

OR

Q.4	**(a)**	What is PLL? Explain operation of PLL with basic blocks and mention any four applications of it in radio communication.	**07**
	(b)	What is need of clipper circuit? Explain op-amp as a positive and negative clipper along with necessary waveforms.	**07**
Q.5	**(a)**	Explain the working of a Schimitt trigger using op-amp	**07**
	(b)	Analyze second order butterworth high Pass filter. Draw its frequency response and state design procedure.	**07**

OR

Q.5	**(a)**	Derive transfer function of Sallen-key low pass filter	**07**
	(b)	Sketch Delyiannis-Friend circuit and obtain its transfer function.	**07**

.

****