Seat No.: _____ Enrolment No._____

GUJARAT TECHNOLOGICAL UNIVERSITY

BE - SEMESTER–IV (New) EXAMINATION – WINTER 2015

Subject Code:2141403 **Date:30/12/2015**

Subject Name: Materials & Manufacture of Food Equipment

Time: 2:30pm to 5:00pm **Total Marks: 70**

Instructions:

1. **Attempt all questions.**
2. **Make suitable assumptions wherever necessary.**
3. **Figures to the right indicate full marks.**

Q.1 **(a)** Explain the cooling curve with diagram when two metals completely soluble in the liquid state but completely insoluble in the solid state. **07**

(b) (1) Describe in brief about types of lines. **07**

(2) Write a difference between first and third angle method of projection.

Q.2 **(a)** Two steel sheets; 1mm thick are resistance welded in a lap joint with a current of 10,000A/sec. The efficiency of joint can be taken as 100μΩ. The joint can be taken as cylinder of 5mm diameter and 1.5m height. Density of steel is 0.00786 g/mm^3 and heat required for melting is taken as 10 J/mm3. Find out melting efficiency and heat lost to the surroundings. **07**

(b) Define the following terms: **07**

i. Root
ii. Crest
iii. Tolerance
iv. Flank angle
v. Geometric tolerance
vi. Lower deviation
vii. Tolerance zone

OR

(b) What are the different types of sectional views? Brief about full and half sectional view. **07**

Q.3 **(a)** What do you mean by plate heat exchanger? Give the application of PHE in food industry. Draw a neat sketch of plate and label the different parts of it. **07**

(b) What are the different processes used to create hardened cases? Briefly explain nitriding process. **07**

OR

Q.3 **(a)** Define material science and material engineering. Explain different engineering properties of materials. **07**

(b) Write a short note on annealing. **07**

Q.4 **(a)** What do you mean by Eutectic System, Peritectic System & Eutectoid System? Explain the different micro-constituents of Iron & Steel. **07**

(b) Write a short note on Resistance Welding. **07**

OR

Q.4 **(a)** Define the following terms. **07**

i. Flux
ii. Slag
iii. Toe of weld
iv. Penetration
v. Plasticity
vi. Fatigue
vii. creep

(b).1 At what duty cycle need a 300 A welding power source rated at 60% duty cycle be operated to get an output current of 400 A ? **03**

(b).2 Discuss the different types of defects observed during and after welding. **04**

Q.5 **(a)** Using first angle projection method draw front view, top view and both side views for a given object. **14**

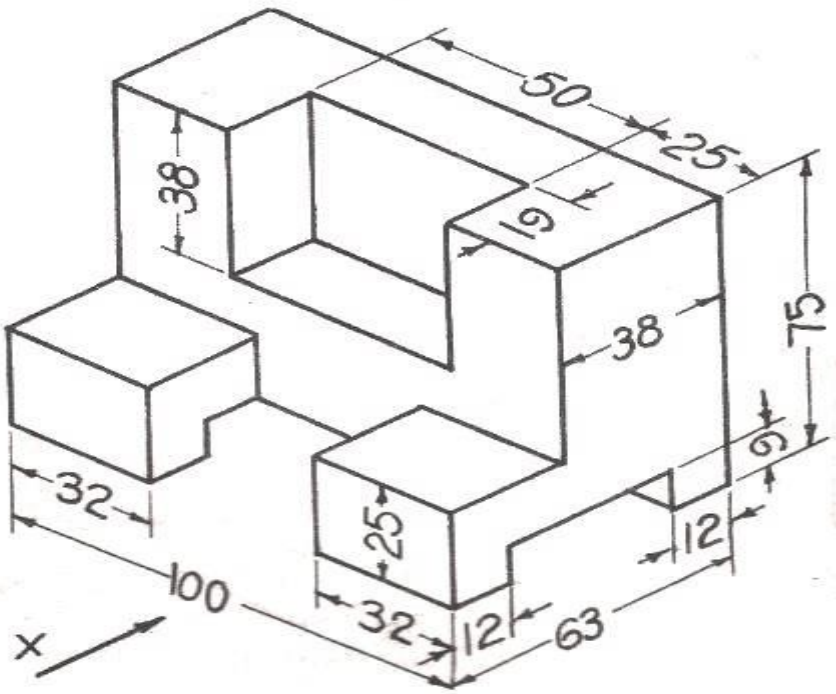

OR

Q.5 **(a)** What is polymerization? Describe in brief about methods of polymerization. **07**

(b) Describe in brie about dimensional tolerance. **07**

****