Seat No.: _____ Enrolment No._____

GUJARAT TECHNOLOGICAL UNIVERSITY

BE - SEMESTER–V EXAMINATION – WINTER 2015

Subject Code: 2150103 **Date:08/12/2015**

Subject Name: Aircraft Structures II

Time: 10:30am to 1:00pm **Total Marks: 70**

Instructions:

1. **Attempt all questions.**
2. **Make suitable assumptions wherever necessary.**
3. **Figures to the right indicate full marks.**

Q.1 **(a)**

1. Explain the significance of thin walled structures and take an example and prove that the moment of inertia of thin walled structure is greater than that of a solid section of similar dimensions 07
2. Discuss different types of fuselage structures with neat sketches and also explain their advantages and applications.

(b) Determine the deflection curve and maximum deflection in a cantilever beam loaded with a UDL "w". The section is rectangular and has width b=200 mm and depth h =150 mm. Span of the beam is 2.5 meters. 07

Q.2 **(a)** Define Neutral Axis; Derive the equations for direct bending stress distribution. Also sketch the direct bending stress distribution of an I-section. 07

(b) The Stress components at a point are given by the following σ_{xx}=10 Mpa, σ_{yy}=8MPa, σ_{zz}=6MPa, $\tau_{XY}=\tau_{YX}$=5MPa, $\tau_{yz}=\tau_{zy}$=10MPa,$\tau_{xz}=\tau_{zx}$=6MPa, calculate the principal stress and principal planes. 07

OR

(b) Determine the stress fields that arises from the following stress function 07

(i) $\Phi=cy^2$

(ii) $\Phi=Ax^2+Bxy+cy^2$

(iii) $\Phi=Ax^3+Bx^2y+cxy^2+Dy^3$

Q.3. **(a)** Analyze the beam as shown in Figure 1 using Stiffness Matrix Method. Take E = 200 x 10^3 N/mm^2 and I = 2 x 10^8 mm^4. 07

(b) A thin walled circular section beam has a diameter of 200mm and is 2m long; it is firmly restrained against rotation at each end. A concentrated torque of 40kn is applied to the beam at its mid span point. If the maximum shear stress in the beam is limited to 300n/mm^2 and the maximum angle of twist to 2^0. Calculate the minimum thickness of beam walls. Take G= 25000 N/mm^2. 07

OR

Q.3 **(a)** State the difference between Stiffness and Flexibility Methods of Structural Analysis. 07

(b) Derive the equation of torque for a bar from Prandtl stress function. 07

Q.4 **(a)** Explain torsion of multi cell closed box beam. 07

(b) Find out shear centre of thin walled section as shown in Fig. 2. Assume constant thickness throughout the section.

OR

Q.4 **(a)** Explain torsion of multi cell open section beams. 07

	(b)	A beam having the cross section shown in Figure 3 is subjected to a bending moment of 1500 Nm in a vertical plane. Calculate the maximum direct stress due to bending stating the point at which it acts.	07
Q.5.	**(a)**	A simply supported beam has a central point load of W. Determine the deflection curve and the maximum deflection if the beam is doubly symmetric.	07
	(b)	Determine the shear flow of the section shown in Figure 4. Explain each step.	07

OR

	(a)	A cantilever beam has a point load of W at the tip. Determine the deflection curve if the section is asymmetric.	07
	(b)	Explain the different types of load and their related stiffness. Also draw the bending moment distribution over the wing and fuselage structure. Which kind of stiffness is important in the different components of wing and fuselage.	07

****

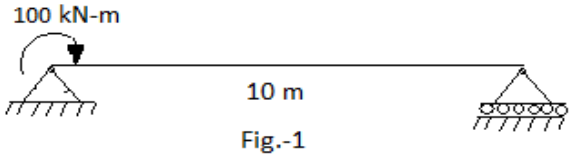

Fig.-1

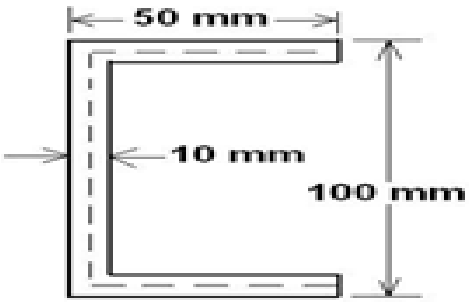

Fig-2

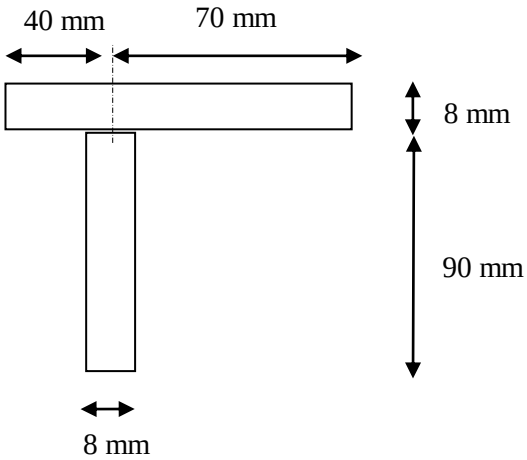

Fig-3

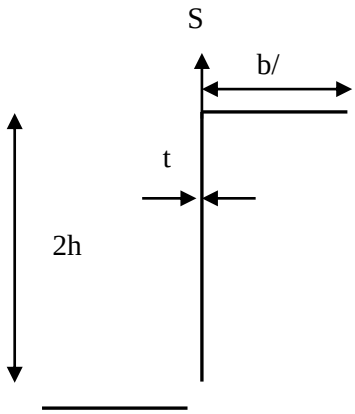

Fig-4