Seat No.: _____ Enrolment No._____

GUJARAT TECHNOLOGICAL UNIVERSITY

BE – SEMESTER – V (NEW) EXAMINATION – WINTER 2015

Subject Code: 2151908 **Date:14/12/ 2015**

Subject Name: Control Engineering

Time:10:30am to 1:00pm **Total Marks: 70**

Instructions:

1. **Attempt all questions.**
2. **Make suitable assumptions wherever necessary.**
3. **Figures to the right indicate full marks.**

Q.1 **(a)** 1. With a suitable example, explain following terms related to a control system. **04**
(a) Control Variable (b) Manipulated Variable (c) Plant (d) Process

2. State and explain conditions for a system to be a linear system. **03**

(b) Derive expressions of rise time and peak time for a second order under damped system excited by a unit step input. **07**

Q.2 **(a)** From the block diagram in Figure 1, to obtain a transfer function C(S) / R(S). **07**

(b) Obtain the transfer function Y(s)/U(s) of the system shown in Figure 2. The displacement input is u(t). **07**

OR

(b) A mechanical system (Figure 3(a)), is subjected to a step input of 200 N. The response curve for the same is shown in Figure 3(b). Determine mass *m*, spring constant *k* and damping coefficient *b* of the system from this response curve. **07**

Q.3 **(a)** A system is described by following a set of linear algebraic equations. Draw signal flow graph and obtain transfer function of the system using Mason's gain formula. **07**

$$x_2 = a_{12}x_1 + a_{22}x_2 + a_{32}x_3$$

$$x_3 = a_{23}x_2 + a_{43}x_4$$

$$x_4 = a_{24}x_2 + a_{34}x_3 + a_{44}x_4$$

$$x_5 = a_{25}x_2 + a_{45}x_4$$

(b) Obtain a state-space representation of the mechanical system shown in Figure 4. Consider u_1 and u_2 as inputs and y_1 and y_2 as outputs. **07**

OR

Q.3 **(a)** 1. Enlist limitations of Routh's stability criterion. **02**

2. Consider following characteristic equation. Using Routh's stability criterion, determine the range of K for stability. **05**

$$S^4 + 2S^3 + (4+\mathrm{K})\mathrm{S}^2 + 9S + 25 = 0$$

(b) 1. Compare the hydraulic system with the pneumatic system. **03**

2. Explain working principle of a dashpot system (hydraulic damper). **04**

Q.4 **(a)** Draw a neat sketch of a hydraulic servomotor and prove that it acts as an integral controller. **07**

(b) With the help of a neat sketch, explain how proportional control is achieved in a force-balance type pneumatic controller. Derive the expression for gain for the same. **07**

OR

Q.4 **(a)** Draw a neat sketch of a pneumatic PID controller, its block diagram and state the transfer function for the same. **07**

(b) A closed-loop control system is represented by the differential following equation, where e is the error signal given as (r – c). **07**

$\frac{d^2c}{dt^2}+4\frac{dc}{dt}=16e$. Determine undamped natural frequency, damping ratio and percentage of maximum overshoot for unit-step input.

Q.5 **(a)** For a second-order system with a sinusoidal transfer function, derive the expression of the resonant peak. **07**

(b) Enlist steps for plotting root locus. **07**

OR

Q.5 **(a)** Explain frequency response specifications (1) Resonant peak (2) Band width (3) Resonant frequency. Also write the equation of each. **07**

(b) Assuming gain K to be positive, plot root loci for the system shown in Figure 5. Is system stable? **07**

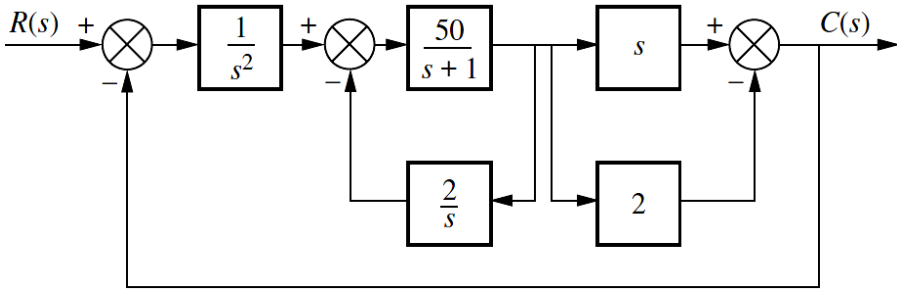

Figure 1

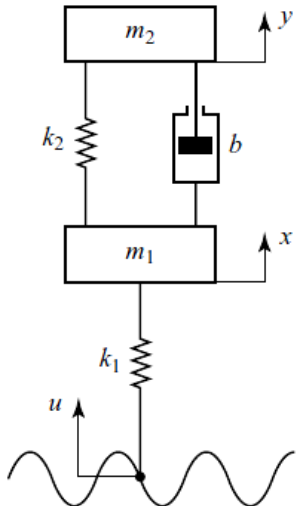

Figure 2

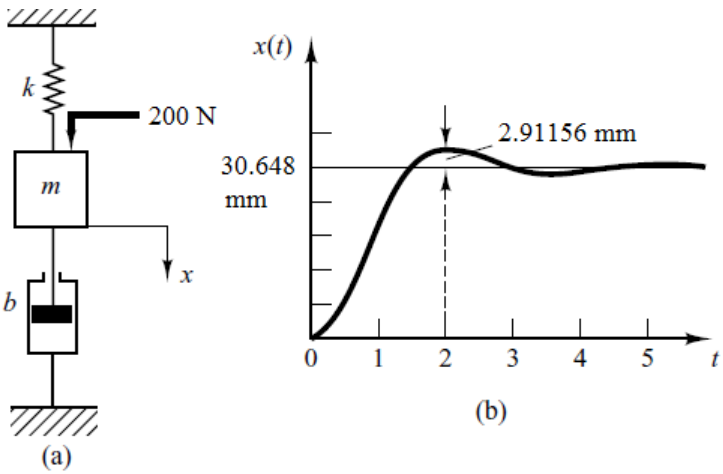

Figure 3

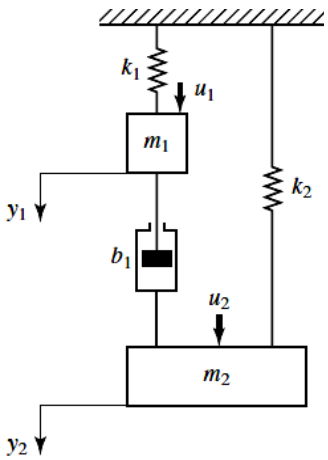

Figure 4

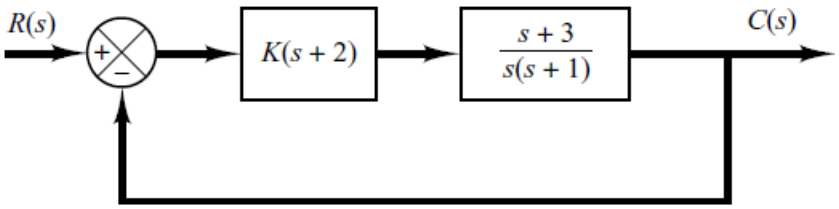

Figure 5

****