Seat No.: _____ Enrolment No._____

GUJARAT TECHNOLOGICAL UNIVERSITY

BE - SEMESTER–1st / 2nd (SPFU) EXAMINATION– WINTER 2015

Subject Code: ENG002 **Date: 18/12/2015**

Subject Name: Engineering Graphics

Time: 10:30am to 01:30pm **Total Marks: 70**

Instructions:

1. **Attempt any five questions.**
2. **Make suitable assumptions wherever necessary.**
3. **Figures to the right indicate full marks**

Q 1	**(a)**	Fig-1 shows pictorial view of an object. Draw the following views, using first angle projection method. Insert all dimensions. 1. Front view looking in the direction of arrow X 2. Top view, 3. Right hand side view	**14**
Q 2	**(a)**	A regular pentagonal plane, side 40 mm is resting on HP on one of its corner with opposite edge to the corner making 30^0. The plane is inclined to HP by 45^0. Draw its projection	**07**
	(b)	A straight line AB 80 mm long is inclined at 45° to the HP and at 30° to the VP. If point A is in the VP and 15 mm above the HP, while the end B is in the first quadrant. Draw its projections.	**07**
Q 3	**(a)**	Draw the projection of a cube of side 40mm resting on one of its corner on HP. One of the body diagonal is parallel to HP.	**07**
	(b)	Draw an ellipse having major axis 130 mm and minor axis 70 mm using Concentric circle method	**07**
Q 4	**(a)**	The development of a cone is a semicircle of 80mm radius having a circular hole of 80mm diameter. Draw the plan and elevation of the cone along with periphery of a circular hole shown on them	**14**
Q 5	**(a)**	Draw and name the curve traced by a point on the perimeter of 60 mm diameter circle if it rolls by one revolution outside the circle with 180 mm diameter	**07**

(b) A 30^0-60^0 set square has its shortest side 50mm long and is in the H.P. The top view of the set square is an isosceles triangle and the hypotenuse of the set square is inclined at an angle of 40^0 with the V.P. Draw the projections of the set square and find its inclination with the H.P. **07**

Q 6 **(a)** In figure 2, AB and AC are two links welded together at the point A at an angle of 75° to each other. The ends A and B of the link AB are constrained to slide in the vertical and horizontal guides respectively. Draw the locus of points C and the midpoint M of the link AB as the link moves from vertical to horizontal position. AB = 100 mm and AC = 60 mm **07**

(b) The front view of a line AB, 90mm long, measures 65mm. Front view is inclined to XY line by 45°. Point A is 20mmbelow H.P. and on V.P. Point B is in third quadrant. Draw the projections and find inclinations of line with H.P. and V.P **07**

Q 7 **(a)** Draw the isometric view of the object, the orthographic views of which are shown in the figure-3. **14**

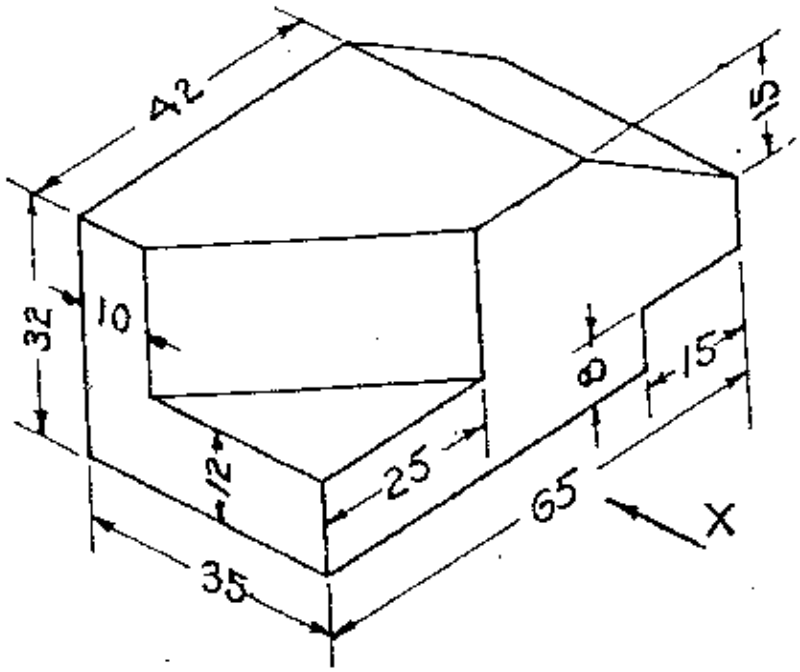

Figure-1

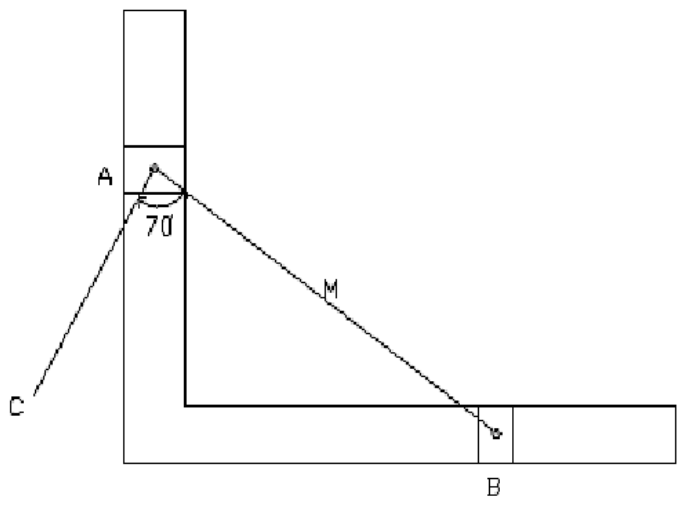

Figure-2

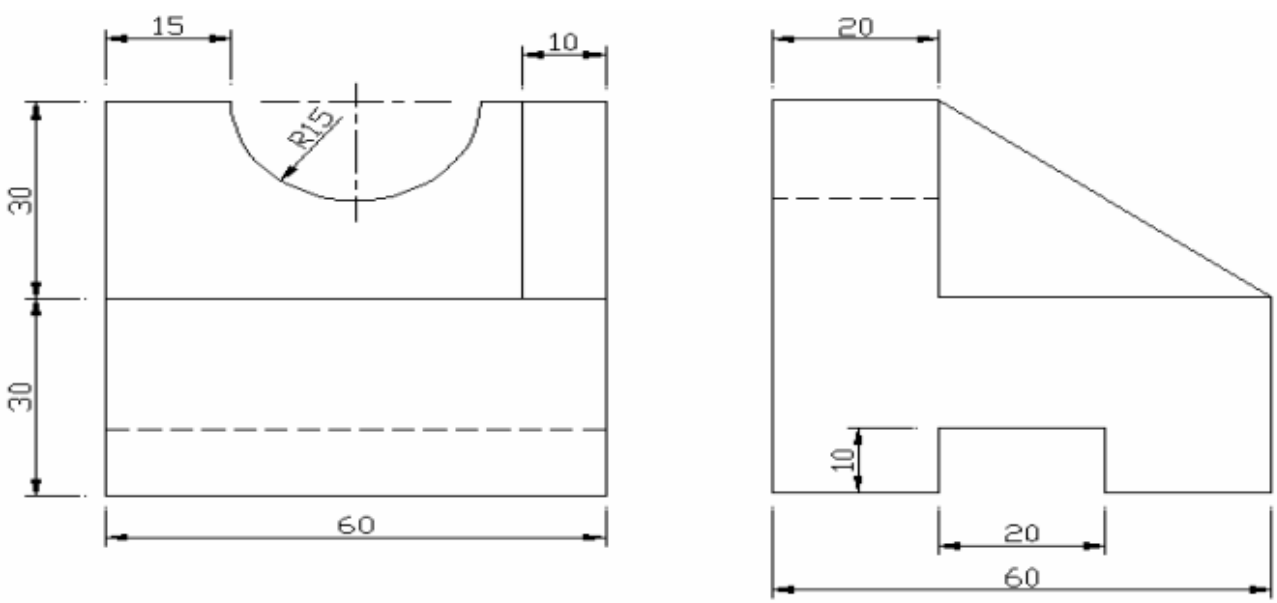

Figure-3