Seat No.: _____ Enrolment No._____

GUJARAT TECHNOLOGICAL UNIVERSITY

DIPLOMA ENGINEERING – SEMESTER –II • EXAMINATION – SUMMER-2016

Subject Code: 320015 **Date: 17 /06 /2016**

Subject Name: M.S. & P.D.

Time:10:30 AM TO 1:30 PM **Total Marks: 70**

Instructions:

1. **Attempt any five questions.**
2. **Make suitable assumptions wherever necessary.**
3. **Figures to the right indicate full marks.**
4. **Each question carry equal marks (14 marks)**

Q.1 (a) Draw a typical fabrication drawing and write sequence of drawing reading. **07**

(b) What is fit? Explain different types of fit with neat sketch **07**

Q.2 (a) Explain commercial form of metal as per BIS in following tabulated format **07**

Sr. No.	Description	Symbol	Dimensions to be specified of the profile section		Designation Example
			letter	figure	

(b) Explain different types of piping flanges with neat sketch **07**

OR

(b) Draw following weld symbols **07**

1. Butt weld
2. Square butt weld
3. Single v butt weld
4. Single bevel butt weld
5. Single V butt weld with broad root face
6. Single bevel butt weld with broad root face

7. Single U butt weld

8. Single J butt weld

9. Backing run weld

10. Fillet weld

11. Plug weld

12. Spot weld

13. Seam weld

14. Flat (flush) single V butt weld

Q.3 Draw following views of object shown in FIG-1 by using 1st angle projection system **14**

1. Front view
2. RHSV
3. Top plan

OR

Q.3 Draw by 1 st angle projection system of object shown in Fig -2 **14**

1. Sectional elevation along A-A

2. RHSV

3. LHSV

4. Sectional plan alon B-B

Q.4 Draw Isometric view of given orthographic views shown in FIG-3 **14**

OR

Q.4 Make detail drawing of cotter joint shown in FIG-4 **14**

Q.5 Draw development of Part-A of object shown in FIG-5 **14**

OR

Q.5 (a) Draw neat sketch and label different parts of following process equipment **07**

1. Pressure vessel
2. Shell and tube heat exchanger

(b) Draw N or Z type nomograph of equation E=I*R **07**

Where I = 0 to 70 Amp

R = 0 to 120 Ohm

Find value of E when I=40 Amp. And R=70 Ohm

****

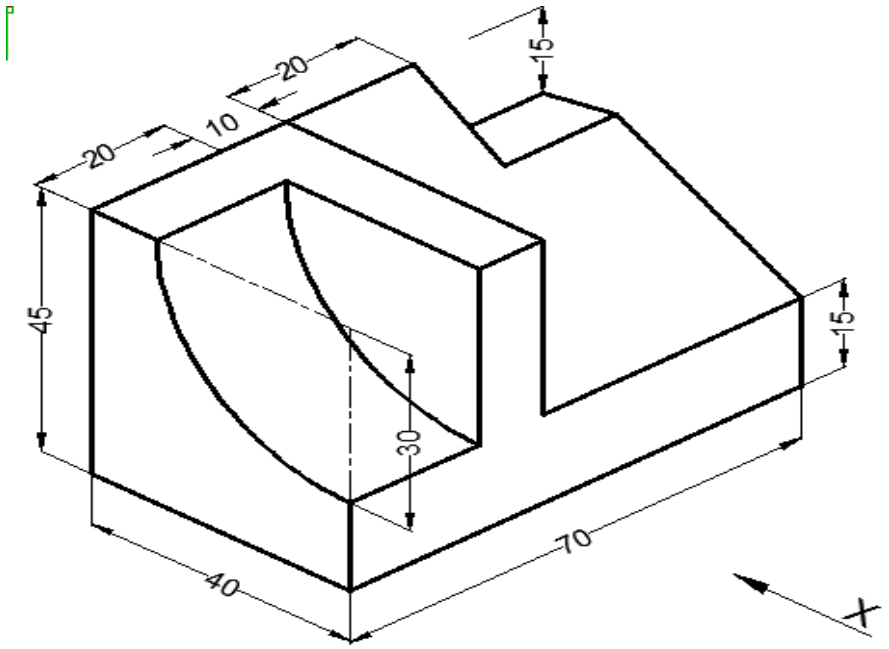

FIG-1 ALL DIMENSIONS ARE IN MM

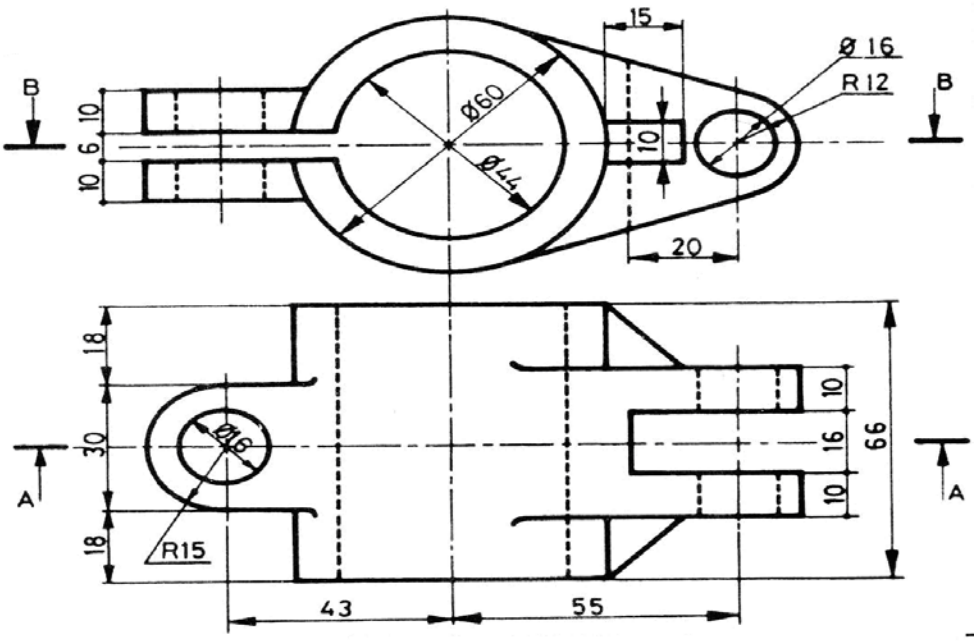

FIG-2 ALL DIMENSIONS ARE IN MM

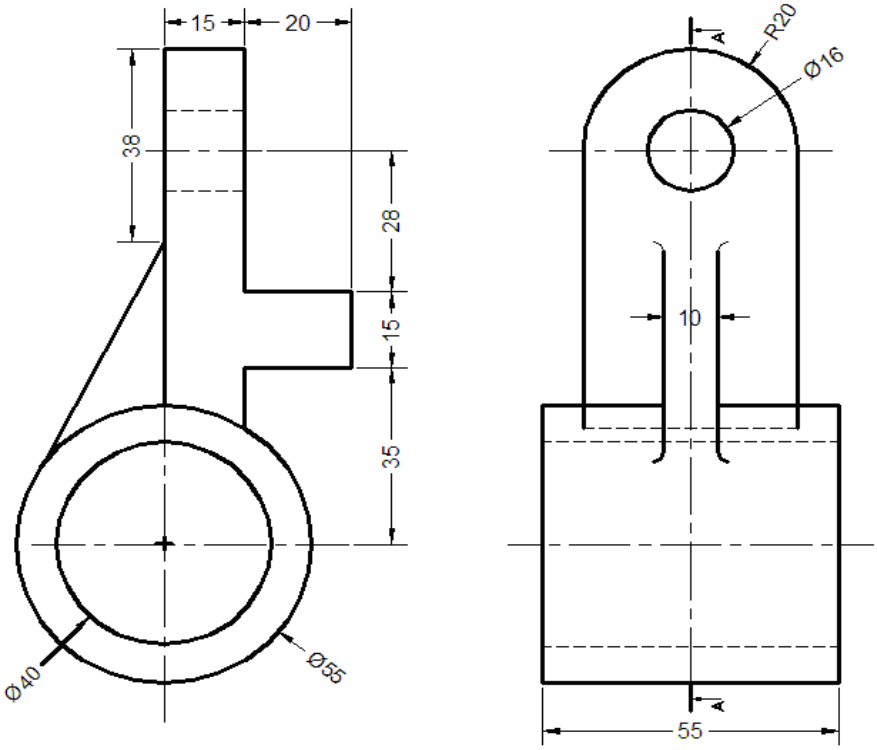

FIG-3 ALL DIMENSIONS ARE IN MM

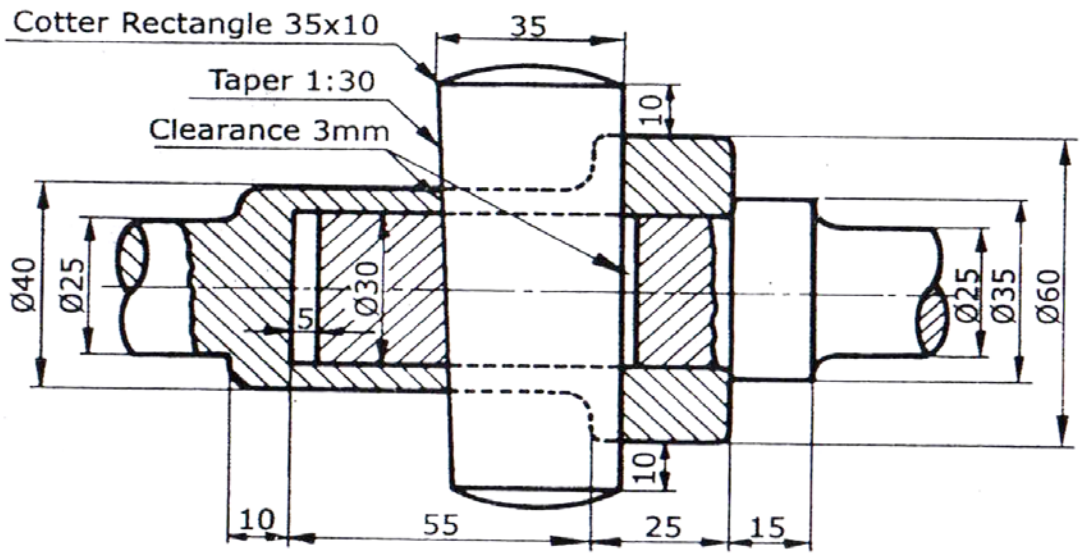

FIG-4 ALL DIMENSIONS ARE IN MM

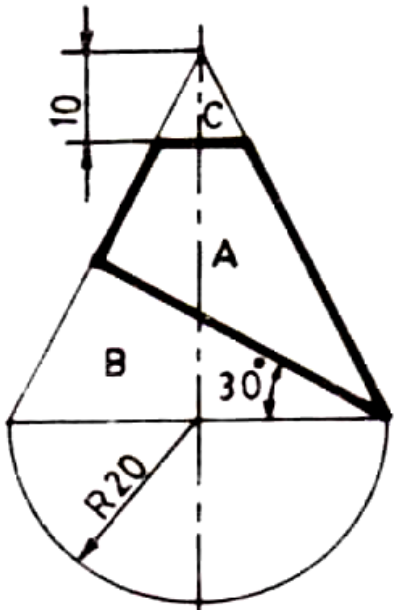

FIG-5 ALL DIMENSIONS ARE IN MM

****