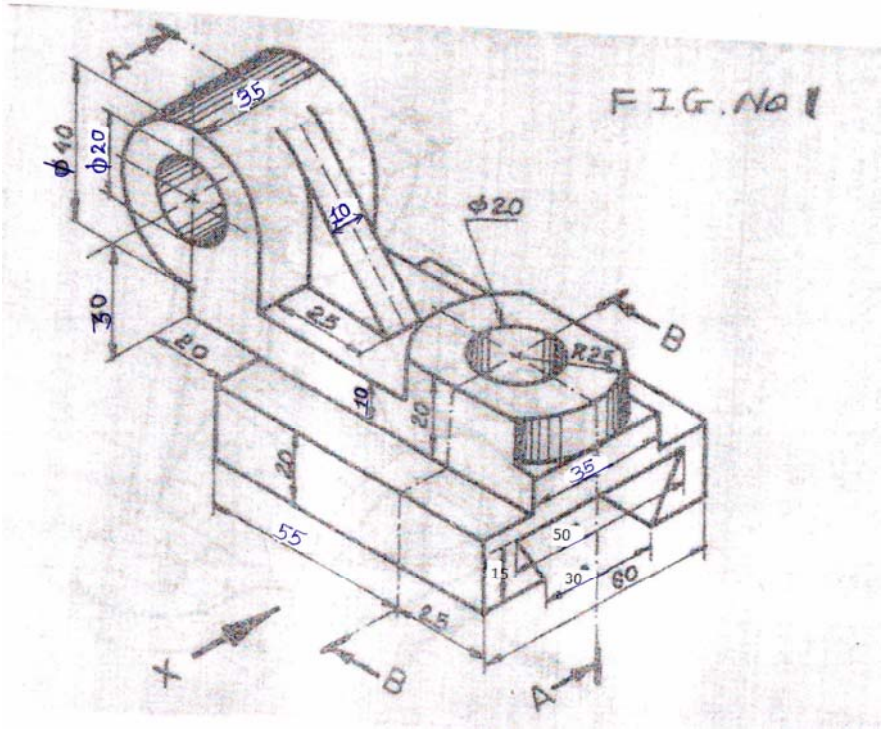

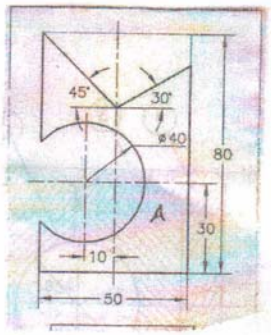

Fig. No. 2

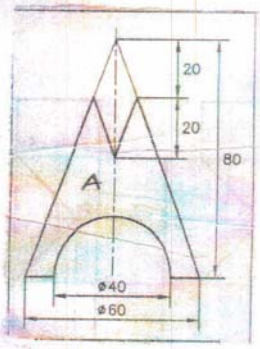

Fig. No. 3

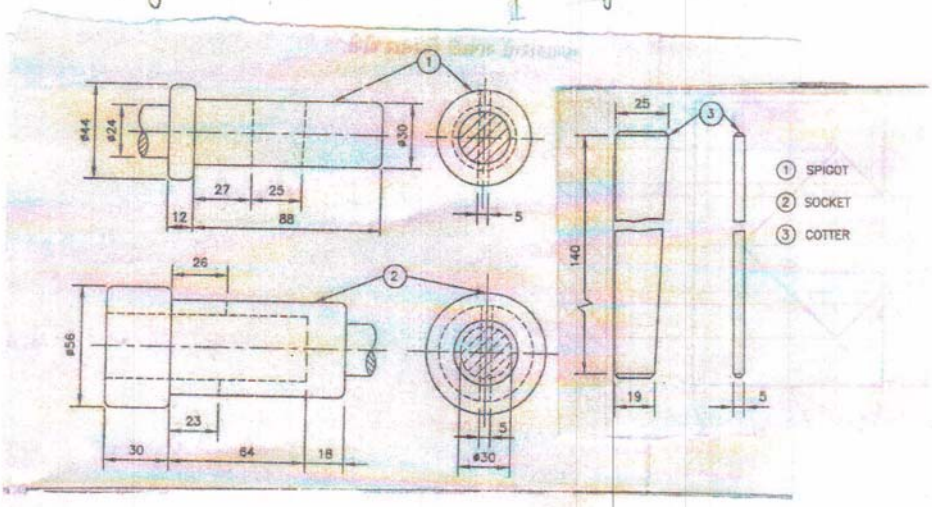

Fig. No. 4