Seat No.: _____ Enrolment No._____

GUJARAT TECHNOLOGICAL UNIVERSITY

DIPLOMA IN ARCHITECTURE – SEMESTER – II • EXAMINATION – WINTER 2015

Subject Code: 3326205 **Date: 05/12/2015**

Subject Name: Structure - I

Time: 02:30 PM TO 04:30 PM **Total Marks: 50**

Instructions:

1. **Attempt all questions.**
2. **Make Suitable assumptions wherever necessary.**
3. **Figures to the right indicate full marks.**
4. **Supplement your answer with neat sketches wherever necessary.**

Q.1 Explain the following terms: (Any five) **05**

1. Force.
2. Explain Principle of transmissibility
3. Earthquake Load.
4. Explain Newton's first Law of Motion.
5. Resolution of forces.
6. Dead Load.

Q.2 (a) Explain various force systems with illustrations (Any Five). **05**

(b) Explain statically determinate and statically indeterminate beam with examples. **05**

OR

Difference between Moment and Couple. **05**

(c) Explain Lami's Theorem and prove it. **05**

Q.3 (a) Explain parallelogram law Statement. **10**

Find the angle between two equal concurrent forces P when their resultant is also equal to P.

OR **10**

Explain Types of Beam (with figure).

Find out all possible reactions at both the supports of simply supported beam given in **Figure (1)**.

Q.4 (a) Develop the relationship between Load, Shear force and Bending moment. **03**

(b) Find out the magnitude and direction of resultant of the force system given in the **Figure (3)**. **07**

Q.5 (a) Explain Stress, strain and Hook's Law. **03**

(b) A mild steel bar 30 mm in diameter 6.0 m long is subjected to an axial pull of 70 kN. Calculate stress, strain and elongation of a bar, if $E = 2.1\times10^5$ N/mm^2. **07**

OR

(b) Draw shear force and bending moment diagrams for the beam given in **Figure (2)**. **07**

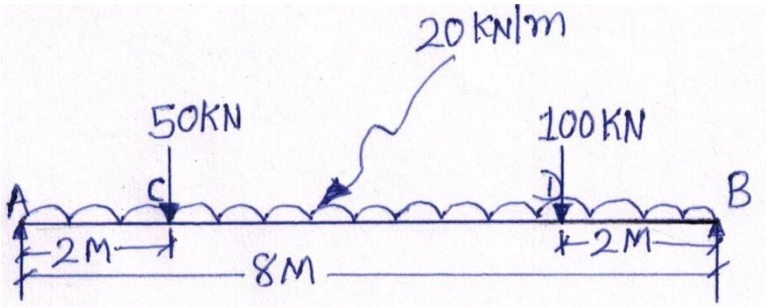

FIG : 1

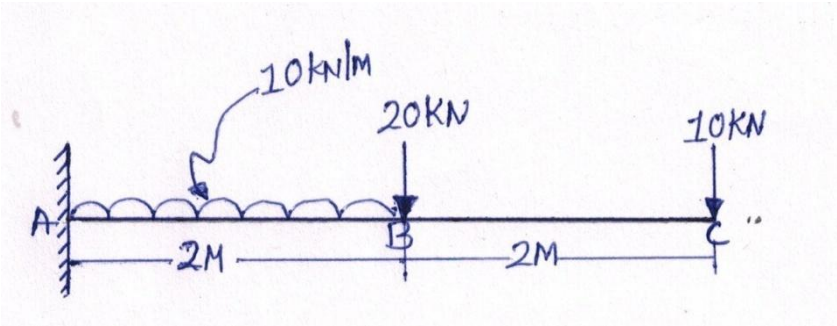

FIG: 2

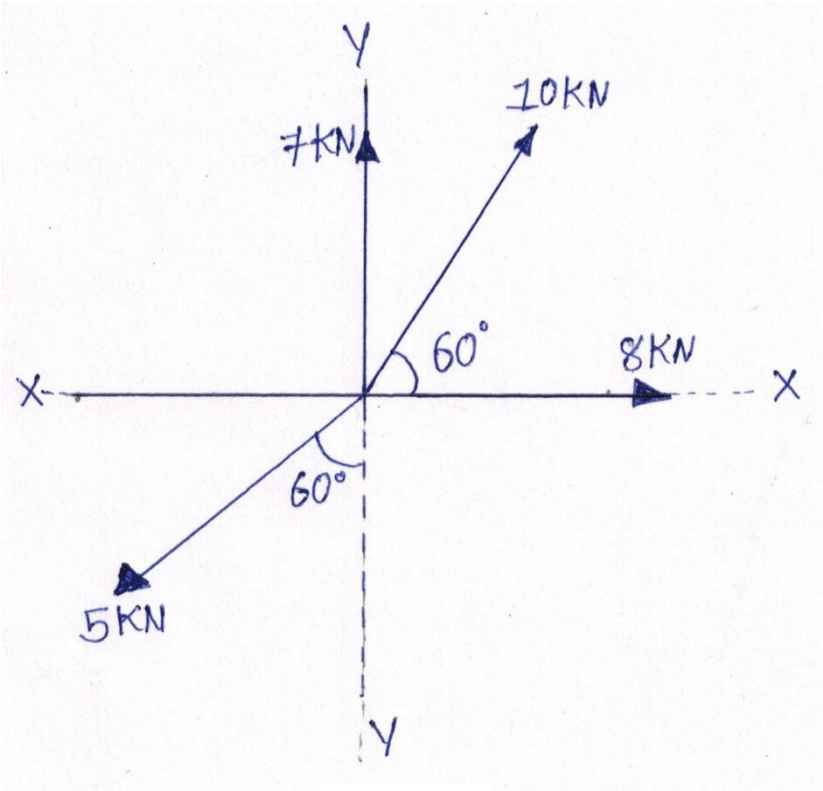

FIG: 3

****