Seat No.: _____ Enrolment No._____

GUJARAT TECHNOLOGICAL UNIVERSITY

ME – SEMESTER I (NEW) – • EXAMINATION – SUMMER 2016

Subject Code: 2710707 **Date:19/05/2016**

Subject Name: Advanced Power System Protection & Switchgear

Time:02:30 pm to 05:00 pm **Total Marks: 70**

Instructions:

1. **Attempt all questions.**
2. **Make suitable assumptions wherever necessary.**
3. **Figures to the right indicate full marks.**

Q.1	**(a)**	State the benefits of digital relays with reference to electromechanical, static and microprocessor based relays.	**07**
	(b)	Explain the concept of following technique with reference to relay algorithm. (1) Differential equation based technique (2) Least Square Error based technique.	**07**
Q.2	**(a)**	What is relay coordination? Describe the generalized flow-chart for relay coordination.	**07**
	(b)	Figure -1 shows a single line diagram of a power system network. Using the flow chart of LINKNET structure, logically find out the backup relay for the PRI R_1.	**07**
		OR	
	(b)	Figure-2 shows a single line diagram of a power system. The relays are directional & non-directional relays. The PS & TDS of relay R_5 is given as 75% and 0.15 respectively. Determine the PS & TDS of the other relays by considering suitable discrimination time.	**07**
Q.3	**(a)**	Explain following with respect to digital protection. (1) Sample and Hold Circuit (2) A/D Converter.	**07**
	(b)	Explain different criteria and procedure is considered while designing load shedding scheme.	**07**
		OR	
Q.3	**(a)**	Explain Wide Area Phasor measurement technology.	**07**
	(b)	What is Wide Area protection? Explain the architecture of Wide Area protection.	**07**
Q.4	**(a)**	Explain phasing voltage & angular synchronism check characteristic of reclosing relay.	**07**
	(b)	What is reclosing? Explain factors governing application of reclosing.	**07**
		OR	
Q.4	**(a)**	Explain breaker-control scheme for single-shot reclosing relays.	**07**
	(b)	Explain following terms with reference to Reclosing relay. (1) Selective reclosing (2) Intermediate lockout (3) De-ionizing time for three-pole reclosing.	**07**
Q.5	**(a)**	Explain the working of Induction Cylinder type frequency relay. Draw its characteristic for a typical operational delay of 6 cycles.	**07**
	(b)	Discuss load-shedding with special considerations for industrial system.	**07**
		OR	
Q.5	**(a)**	Explain the problems that occur during the protection of transmission line due to the presence of series capacitor.	**07**

(b) What is the apparent impedance seen by a distance relay during current inversion problem when series compensation is given at (i) the middle of the transmission line (ii) the end of the transmission. **07**

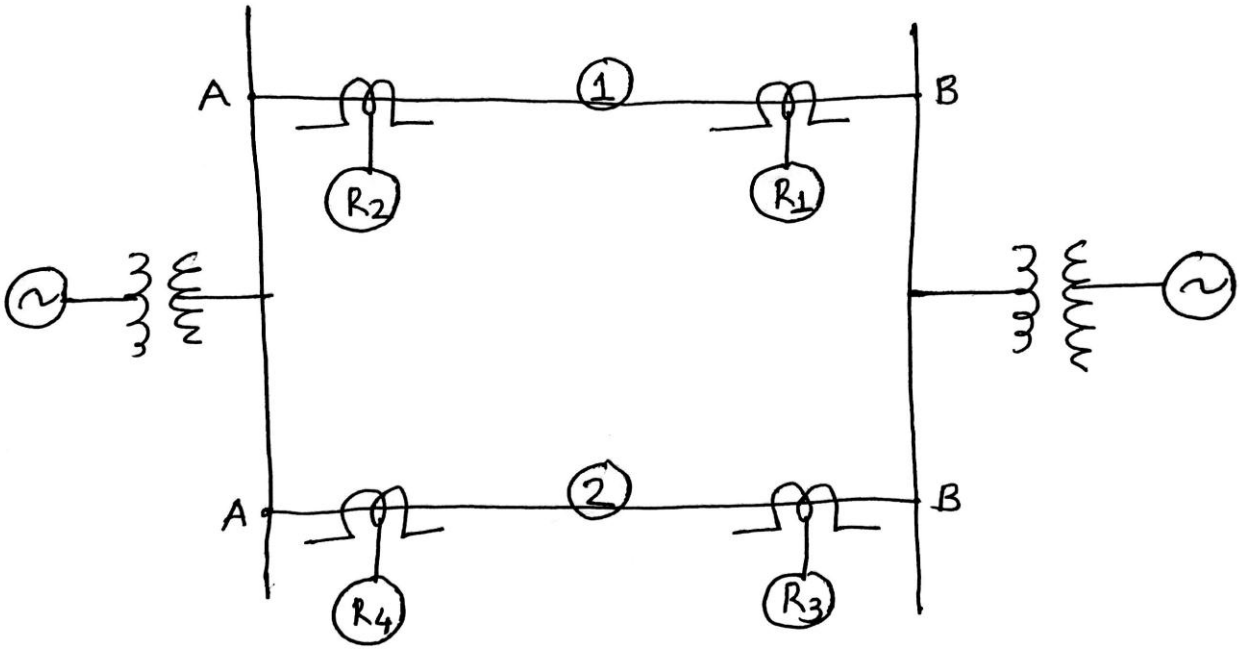

Figure-1

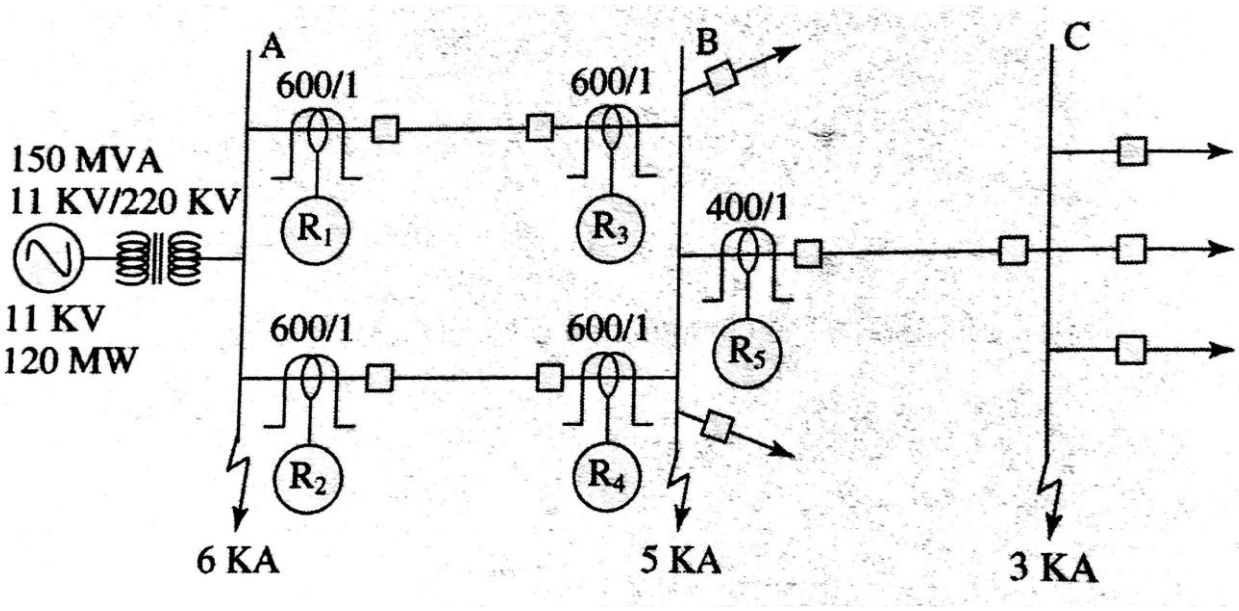

Figure-2

****