Seat No.: _____ Enrolment No._____

GUJARAT TECHNOLOGICAL UNIVERSITY

ME – SEMESTER I (NEW) – • EXAMINATION – SUMMER 2016

Subject Code: 2710907 **Date: 19/05/2016**

Subject Name: Advanced Engineering Dynamics

Time:02:30 pm to 05:00 pm **Total Marks: 70**

Instructions:

1. **Attempt all questions.**
2. **Make suitable assumptions wherever necessary.**
3. **Figures to the right indicate full marks.**

Q.1 **(a)** Explain the Angular momentum of Rigid bodies. **07**

(b) Explain the concept of joint kinematical analysis. **07**

Q.2 **(a)** Derive the velocity and acceleration relations for a particle moving on a curved path using (r, θ) coordinate system. **07**

(b) Derive Newton-Euler equation of motion for rigid bodies. **07**

OR

(b) Derive the momentum and energy principles for rigid bodies. **07**

Q.3 **(a)** Arm AB rotates clockwise at the constant rate of 40 rad/s as it pushes the slider along guide CD, which is described by $y = x^2/200$ (x and y are in millimeters). Determine the velocity and acceleration of the slider when it is at the position
x = 200 mm. **07**

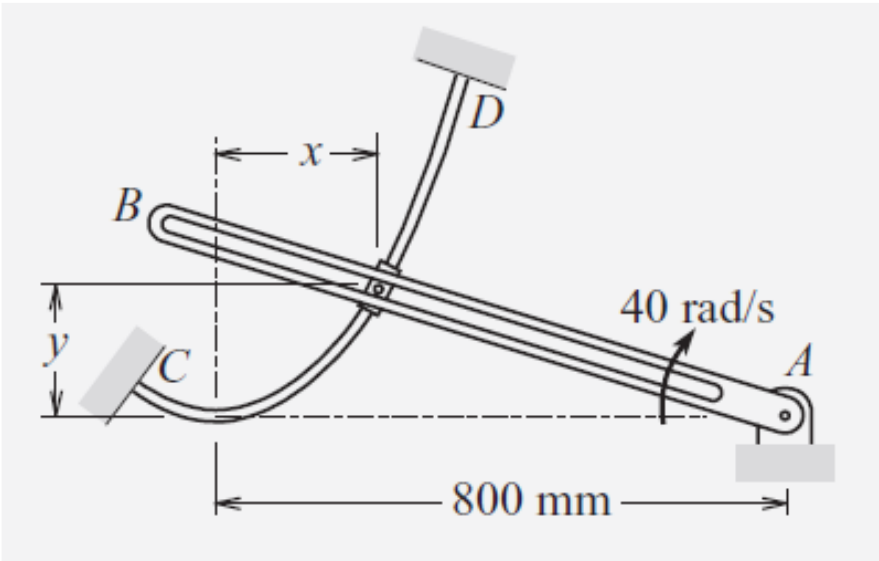

(b) A free gyroscope consists of a flywheel that rotates relative to the inner gimbal at the constant angular speed of 8000 rev/min, and the rotation of the inner gimbal relative to the outer gimbal is $\gamma = 0.2 \sin(100\pi t)$ rad. The rotation of the outer gimbal is $\beta = 0.5 \sin(50\pi t)$ rad. Use the Eulerian angle formulas to determine the angular velocity and angular acceleration of the flywheel at $t = 4$ ms. Express the results in terms of components relative to the body-fixed *xyz* and space-fixed *XYZ* reference frames, where the *x* axis was directed from bearing D to bearing *C* at $t = 0$. **07**

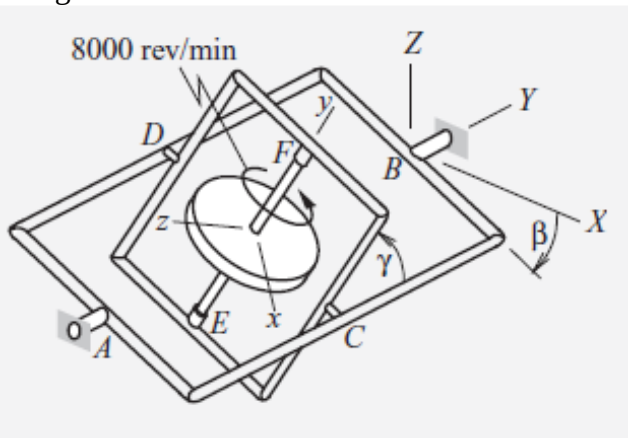

OR

Q.3 **(a)** The positions of two points are known to be $\bar{r}_A = -250\,\bar{I} + 400\,\bar{J} - 500\,\bar{K}$ mm relative to the xyz coordinate system described in the sketch and $\bar{r}_B = 400\,\bar{I} - 600\,\bar{J} + 200\,\bar{K}$ mm relative to the XYZ coordinate system. Determine the position coordinates of each point relative to the coordinate system not given, and also determine the distance between the points. **07**

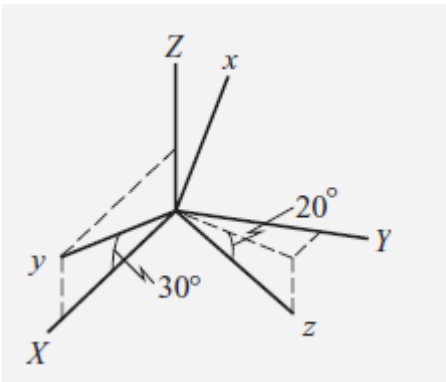

(b) The rectangular plate, whose mass is *m,* serves as a fire door. In case of an emergency, the cable holding the plate is severed and the door swing down under the restraint of the rigid links that suspend the plate from the ceiling. Derive a differential equation of motion governing the angle of inclination θ of the links. Also derive expressions for the forces exerted by the links on the plate. The mass of each link is negligible. **07**

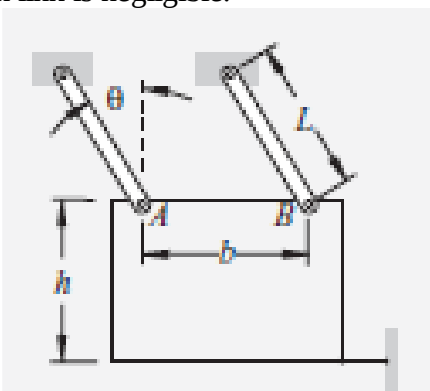

Q.4 **(a)** An xyz coordinate system, which initially coincided with a stationary XYZ coordinate system, first undergoes a rotation $\theta_1 = 65^\circ$ about the Y axis, followed by $\theta_2 = -145^\circ$ about the Z axis. **Determine** **07**

(a) the coordinates relative to xyz in its final orientation of a stationary point at X = 2, Y= −4, Z = 3 m;

(b) the coordinates relative to XYZ of the point that remains at x = 2, y = −4, z = 3 m throughout the motion.

(b) The disk rolls without slipping as it is pulled to the right by the yoke. Generalized coordinates are the horizontal distance *x* to pin *B* and the angle *θ* by which the radial line to pin *B* rotates. Derive the velocity constraint equation relating these two variables and show that it is holonomic. What is the corresponding configuration constraint? **07**

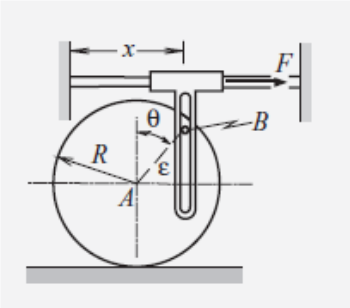

OR

Q.4 **(a)** Discuss the general procedural steps for Newton-Euler Equations of motion. **07**

(b) Derive formulation with Quasi-Coordinates. **07**

Q.5 **(a)** Explain Lagrange equation with constraints. **07**

(b) Definition of Generalized forces. **07**

OR

Q.5 **(a)** Prove that the virtual work done by the inertia forces is equal to the time rate of change of the work done by the momentum minus the virtual change in kinetic energy. **07**

(b) Explain the Hamilton principle **07**

****