Seat No.: _____ Enrolment No._____

GUJARAT TECHNOLOGICAL UNIVERSITY

ME – SEMESTER II (NEW) – • EXAMINATION – SUMMER 2016

Subject Code: 2720801 **Date: 25/05/2016**

Subject Name: Finite Element Methods

Time:10:30 am to 01:00 pm **Total Marks: 70**

Instructions:

1. **Attempt all questions.**
2. **Make suitable assumptions wherever necessary.**
3. **Figures to the right indicate full marks.**

Q.1	**(a)**	1. Enlist properties of the global stiffness matrix.	**03**
		2. Enlist and explain non-linearities.	**04**
	(b)	For the truss shown in Fig. 1, determine nodal displacements. For elements 1 and 2, A = 6 x 10^{-4} m^2, and for element 3 A = 6√2 x 10^{-4} m^2. Take E = 210 GPa.	**07**
Q.2	**(a)**	Explain step by step procedure to solve an eigenvalue problem using Jacobi method.	**06**
	(b)	Consider a simply supported beam under uniformly distributed load. The governing differential equation is given as follows, where, v is the transverse displacement of the beam and q_o is the uniformly distributed load. $EI\frac{d^4v}{dx^4}-q_0=0$. Use boundary conditions $v(0)=0$, $\frac{d^2v}{dx^2}(0)=0$, $\frac{d^2v}{dx^2}(L)=0$, and $v(L)=0$.	**08**
		OR	
	(b)	Derive the equation of stiffness matrix of a truss element.	**07**
Q.3	**(a)**	Determine nodal displacement and stresses in each elements for the bar assemblage in the Fig. 2.	**06**
	(b)	Draw the shape functions for a CST element and for a LST element. Also derive the strain-displacement matrix for a CST element.	**08**
		OR	
Q.3	**(a)**	Explain following terms: (1) Subparametric formulation (2) Superparametric formulation (3) Isoparametric formulation (4) Mass lumping.	**06**
	(b)	Derive Jacobian of Q4 element and tetrahedral element.	**08**
Q.4	**(a)**	1. Discuss the effect of mesh node numbering.	**03**
		2. Differentiate between Kirchoff plate and Mindlin plate elements in terms of their capabilities and limitations.	**03**
	(b)	Explain step by step procedure to solve an eigenvalue problem using vector iteration method.	**08**
		OR	
Q.4	**(a)**	1.What is hourglass phenomenon? Discuss the effect of integration scheme on the same.	**04**
		2. Draw the shape functions for a CST element and for a LST element.	**03**
	(b)	Derive the stiffness matrix of a 3 noded 1-D bar element.	**07**
Q.5	**(a)**	A composite wall consists of 3 materials with thermal conductivities k_1 = 70 W/mK, k_2 = 40 W/mK and k_3 = 20 W/mK respectively. Thickness of inside wall is 20 mm is at 200 ^oC. Outside wall is 40 mm thick and is exposed to air with 50 ^oC with convection coefficient of 10 Wm^2K. The intermediate wall is 25 mm thick. Determine the temperature distribution across the wall.	**06**
	(b)	Consider a beam element as shown in Fig. 3. Determine displacement of nodes.	**08**
		OR	

Q.5 **(a)** A metallic fin with an insulated tip is 1 mm thick and 100 mm long, extends from a wall whose temperature is 235 ^{o}C. The fin has thermal conductivity of 360 W/m^{o}C. Determine temperature distribution and amount of heat transferred from fin to the air at 20 ^{o}C and h = 9 W / m^{2} ^{o}C. Assume fin width to be 1m and use three elements. **06**

(b) Consider a beam element as shown in Fig. 4. Determine displacement of nodes. **08**

****

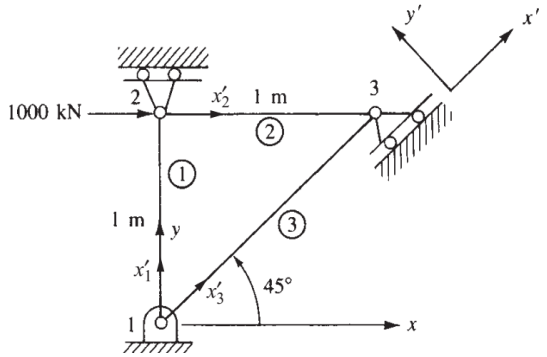

Fig 1

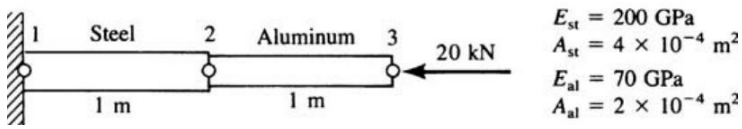

Fig 2

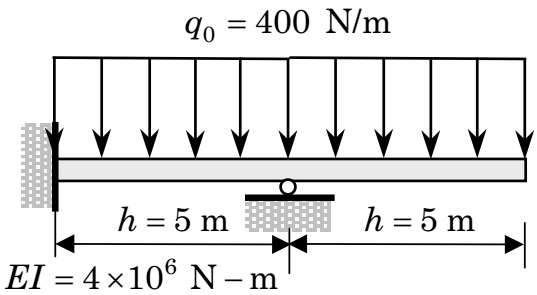

Fig 3

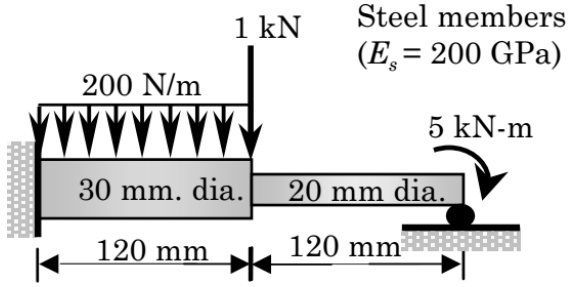

Fig 4