Seat No.: _____ Enrolment No._____

GUJARAT TECHNOLOGICAL UNIVERSITY

ME – SEMESTER II (NEW) – • EXAMINATION – SUMMER 2016

Subject Code: 2725001 **Date: 25/05/2016**

Subject Name: Robotics and Artificial Intelligence

Time:10:30 am to 01:00 pm **Total Marks: 70**

Instructions:

1. **Attempt all questions.**
2. **Make suitable assumptions wherever necessary.**
3. **Figures to the right indicate full marks.**

Q.1 **(a)** Define Automation. List out all the types of Automation and Explain them in detail by giving the industrial applications of each. **07**

(b) Explain the following terminologies in regard to robotics: **07**
(1)Accuracy, (2) Repeatability, (3) Degree of freedom,
(4) Pay Load, (5) Work envelope, (6) Control Resolution (7) Speed of response

Q.2 **(a)** Compare and Explain Artificial Intelligence Vs. Human Intelligence with examples. Explain the AI system in an fully programmed Washing Machine. **07**

(b) (i)What do you mean by robot configuration? Draw a neat sketch of articulated arm and explain. **07**
(ii) One link of a robot has stroke of 0.50m.The robot's control memory has 8 bit storage capacity .Determine the control resolution of the link.

OR

(b) What is Forward kinematics and Inverse kinematics? Explain with at least one example. **07**

Q.3 **(a)** Do Forward Kinematic analysis using Denavit-Hartenberg table for a 3 DOF articulated robotic arm. **07**

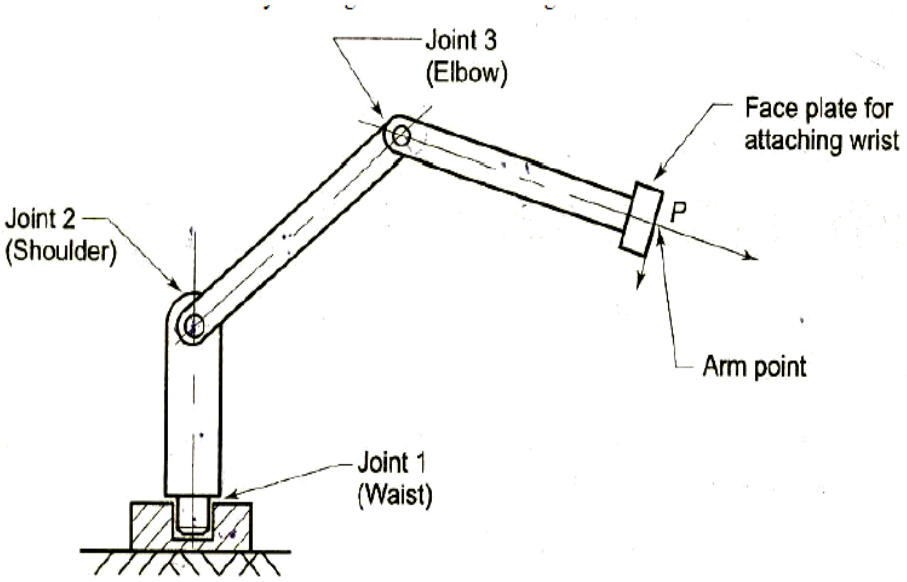

Fig. 1 (3 – D.O.F. articulated robot arm)

(b) Explain different angle configuration for inverse kinematics. **07**
(i)Roll,pitch and yaw
(ii) Euler's angle

OR

Q.3 **(a)** Enlist the use of sensors in robotics. Also List & Explain the seven Desirable Features of Sensors. **07**

(b) What do you mean by trajectory planning? Explain the procedure for trajectory planning for higher order curve. **07**

Q.4 **(a)** Enlist robot cell layouts. Compare "Robot centered cell" and "Inline robot cell". **07**

	(b)	Explain various types of gripper mechanism. Explain design procedure of anyone in detail.	**07**

OR

Q.4	**(a)**	Discuss the factors of consideration while selecting the gripper for the robot.	**07**
	(b)	What is the Importance of the Interlocks? Explain different types of Interlocks & their uses in detail.	**07**
Q.5	**(a)**	Compare Depth-first search and Breadth-first search	**07**
	(b)	Explain "Lead Through Programming Methods".	**07**

OR

Q.5	**(a)**	What is heuristic function? Give & explain the importance of heuristic function by taking a real life application.	**07**
	(b)	What is Artificial Intelligence? List out five major applications of AI and explain any one application of Mechanical System in detail.	**07**

****