Seat No.: _____ Enrolment No._____

GUJARAT TECHNOLOGICAL UNIVERSITY

ME - SEMESTER– II(Old course) • EXAMINATION (Remedial) – WINTER- 2015

Subject Code: 1720802 **Date: 10/12/2015**

Subject Name: Computer Aided Manufacturing

Time:2:30 pm to 5:00 pm **Total Marks: 70**

Instructions:

1. **Attempt all questions.**
2. **Make suitable assumptions wherever necessary.**
3. **Figures to the right indicate full marks.**

Q.1 **(a)** Differentiate between conventional machine tools and NC/CNC machine tools. Enlist some of the features that are built into NC/CNC machine tools to reduce non-productive time. **04**

(b) With the help of a neat schematic diagram, show axes system of a CNC vertical milling machine with rotary table. State the axes designation rules followed. **04**

(c) Explain open loop and closed loop system in CNC machine tools using suitable block diagrams. **03**

(d) Differentiate between Point-to-Point (PTP) control and Contouring (C) control of CNC machine tools. Which types of controls are used in a CNC drilling machine and CNC milling machine? **03**

Q.2 **(a)** Mention different ways of programming following geometric entities along with their syntax in APT; **07**

1. Point
2. Line
3. Circle

(b) Prepare a manual part program for profile milling of 10 mm thick component shown in Figure 1 on CNC vertical milling machine. Follow the path A-B-C-D-E-F-G-A while machining the profile. Use sub programming feature for successive depth of cut in axial direction. State the assumptions made and cutting parameters selected. **07**

OR

(b) Write a manual part program using suitable canned cycles for manufacturing of component shown in Figure 2 on a CNC lathe. The suggested sequence of operations is as follows; **07**

	Operation	Tools	Cutting speed	Feedrate mm/rev
1	Facing	T01	150 m/min	0.15
2	Rough Turning	T03	200 m/min	0.2
3	Finish Turning	T06	250 m/min	0.1
4	Grooving	T04	100 m/min	0.1
5	Threading	T02	400 rpm	pitch

Q.3 **(a)** Explain the meaning of following terms in context of APT programming using neat schematic diagram; **04**

1. Drive surface
2. Part surface
3. Check surface

(b) What is *"stick-slip"* phenomenon in friction guide ways? ñAntifriction guide ways are preferred over friction guide ways in CNC machine toolsò- Justify. **05**

(c) One axis of an NC positioning system is driven by a stepping motor. The motor is directly connected to a lead screw whose pitch is 4.0 mm. The required control resolution for the table is specified as 0.015 mm. Determine, **05**

1. the number of pulses in one revolution of motor required to achieve the specified control resolution,
2. step angle of the motor, and
3. linear velocity of the table at a pulse frequency of 200 pulses per second.

OR

Q.3 **(a)** In an interpolation scheme of APT programming, a circle is approximated using series of linear interpolation statements. The values of INTOL and OUTTOL are specified as 5 microns and 3 microns respectively. What will be the number of line segments used to approximate a circle of 5 mm radius? **04**

(b) Explain the working of incremental rotary encoders using neat schematic diagram. **05**

(c) Explain the procedure to be followed while generating part program using CAD/CAM software. Represent your answer with suitably designed flow chart. **05**

Q.4 **(a)** Explain the meaning of following terms in context of FMS with suitable examples; **06**

1. Machine Flexibility
2. Routing Flexibility
3. Expansion Flexibility

(b) What software modules are required for efficient functioning of an FMS? Explain any three of such modules with appropriate examples. **08**

OR

Q.4 **(a)** Differentiate between Flexible Manufacturing Cell (FMC) and Flexible Manufacturing System (FMS). **04**

(b) What is the need of an AS/RS? Explain various configurations of AS/RS systems available in an automated industry. **05**

(c) What is the need of automated deburring and wash station in an FMS? Explain various configurations of automated deburring stations and automated wash stations. **05**

Q.5 **(a)** What are the standard data storage models available while developing database for CIM systems? Explain two of these models with appropriate example in each case. **07**

(b) What do you mean by *"smart sensors"*? **07**

Differentiate between following types of sensors using suitable examples;

1. Self-generating and modulating sensors
2. Digital and analog sensors

OR

Q.5 **(a)** How are communication networks grouped? Discuss various networking topologies used to integrate various elements in CIM environment. **07**

(b) Explain the meaning of following terms in digital logic design; **07**

1. Digital logic gate
2. Digital flip-flops
3. Combinational logical circuits
4. Sequential logic circuits

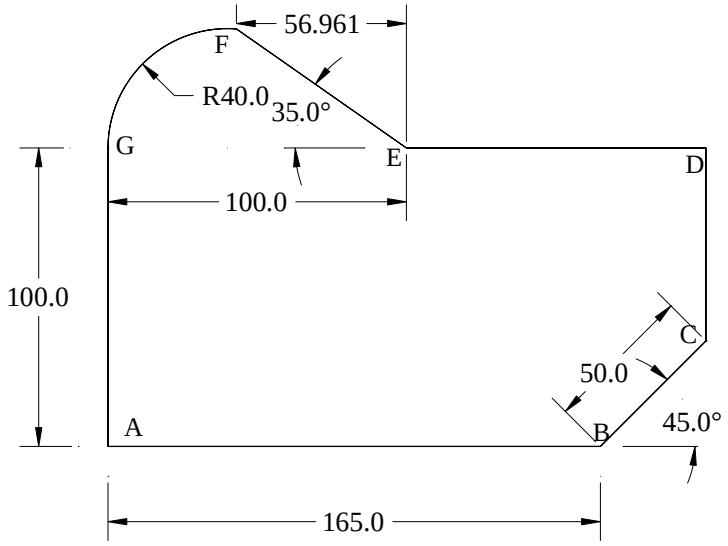

Figure 1 (for Q.2 (B))

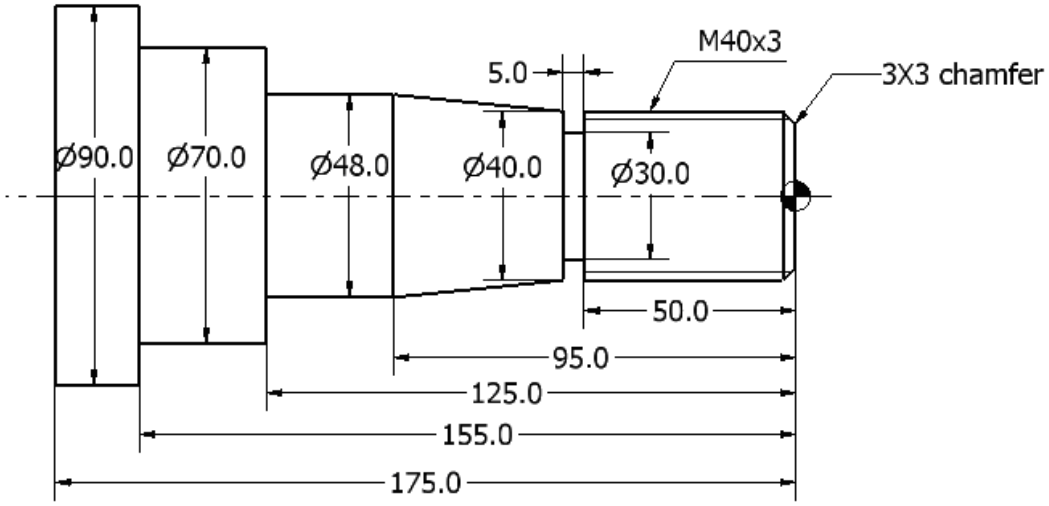

Figure 2 (for Q.2 (B))

****