Seat No.: _____ Enrolment No._____

GUJARAT TECHNOLOGICAL UNIVERSITY

ME - SEMESTER– II(Old course) • EXAMINATION (Remedial) – WINTER- 2015

Subject Code: 1724303 **Date: 09/12/2015**

Subject Name: Geosynthetics and Reinforced Earth

Time:2:30 pm to 5:00 pm **Total Marks: 70**

Instructions:

1. **Attempt all questions.**
2. **Make suitable assumptions wherever necessary.**
3. **Figures to the right indicate full marks.**

Q.1	**(a)**	Explain the basic mechanisms involved in the reinforcement function with help of neat sketches.	**07**
	(b)	Define the following phenomena with respect to filteration: ôblockingô, ôblindingô, ôcloggingô.	**07**
Q.2	**(a)**	Describe the basic similarities and differences between geotextiles and geogrids.	**07**
	(b)	In laboratory constant head in plane permeability test on a 300 mm length (flow direction) by 200 mm width geotextile specimen, the following parameters were measured Nominal thickness of geotextile = 2 mm; Flow rate of water in the plane of geotextile (Q_p) = 52 cm^3/min Head loss in the plane of geotextile =200 mm Calculate the transmissivity and the in-plane coefficient of permeability of geotextile.	**07**
		OR	
	(b)	Describe the major steps of manufacturing process for the following types of geosynthetics (a) woven geotextiles (c) extruded geogrids	**07**
Q.3	**(a)**	Write brief note on use of geosynthetics in water resources projects.	**10**
	(b)	Write advantages of using geosynthetics in pavements.	**04**
		OR	
Q.3	**(a)**	Explain in detail the use of geotextiles in earthen dam construction.	**10**
	(b)	Draw a neat diagram to show the components of a railway track with the placement of the geosynthetic layers.	**04**
Q.4		Answer in three-four lines with proper reasons/justifications: i. What is the importance of material factor in design of RE wall and how it is applied? ii. Why larger value of $\mathring{u}_1$ is needed to cause failure in case of reinforced soil in compare to unreinforced soil? iii. What is active zone in design of RE wall and which type of length is provided in active zone? Why length is extended to resistant zone? iv. W hat is bond stress? How it is determined? Is there any relation between bond stress and cohesive soil? v. What is importance of reinforcement geometry and how it affects external stability of RE wall? Which type of reinforcement is adopted? vi. What do you mean by durability and performance of RE wall with time? vii. Which type of fill material is adopted in RE wall? How axial tensile strain of reinforcement affects mobilized shear strength of soil?	**14**

OR

Q.4 Attempt the following: **14**

(i) State the types of reinforced earth walls as per BS8006. Explain various environmental considerations taken into account during design of RE wall.

(ii) Consider a section of a retaining wall with a reinforced backfill and having surcharge of intensity (q_o) =40 kN/m^2 of 1m length and located at 1m from facing unit. Determine the reinforcement distribution, maximum tension in the strip and check for external stability. Take Height of wall = 6m,
width of strips = 100mm, thickness of strips = 6mm, f_a = 143.7MPa,
c = 0, Ø = 33°, ɔ = 17.8 kN/m^3, h x s= 0.5mx 0.5m. Consider first strip at 0.25 depth from top.

Q.5 (a) What is the importance of external stability in design of RE wall as per BS8006? How it is evaluated? Support your answer with necessary equations. **07**

(b) Explain how reinforcement is used to control embankment stability resting on soft soils. State various limit states considered for embankment stability and define with neat sketch rotational stability. **07**

OR

Q.5 Figure.1 shows section of a retaining wall with geotextile reinforcement. The wall is backfilled with granular soil having Ø = 36, ɔ = 19.12 kN/m^3. A woven slit-film geotextile with warp direction ultimate wide-width strength of 80kN/m and having ŭ = 26° is intended to be used in its construction. The orientation of the geotextile is perpendicular to the wall face and the edges are to be overlapped to handle the weft direction. A factor of safety of 1.5 is to be used along with site specific reduction factors. Determine (i) spacing of the individual layers of geotextile (ii) length of fabric layers (iii) check for overlap (iv) check for external stability. The backfill carries a uniform surcharge dead load of 10kN/m^2.Assume C_r = 0.8 and C_i = 0.75. **14**

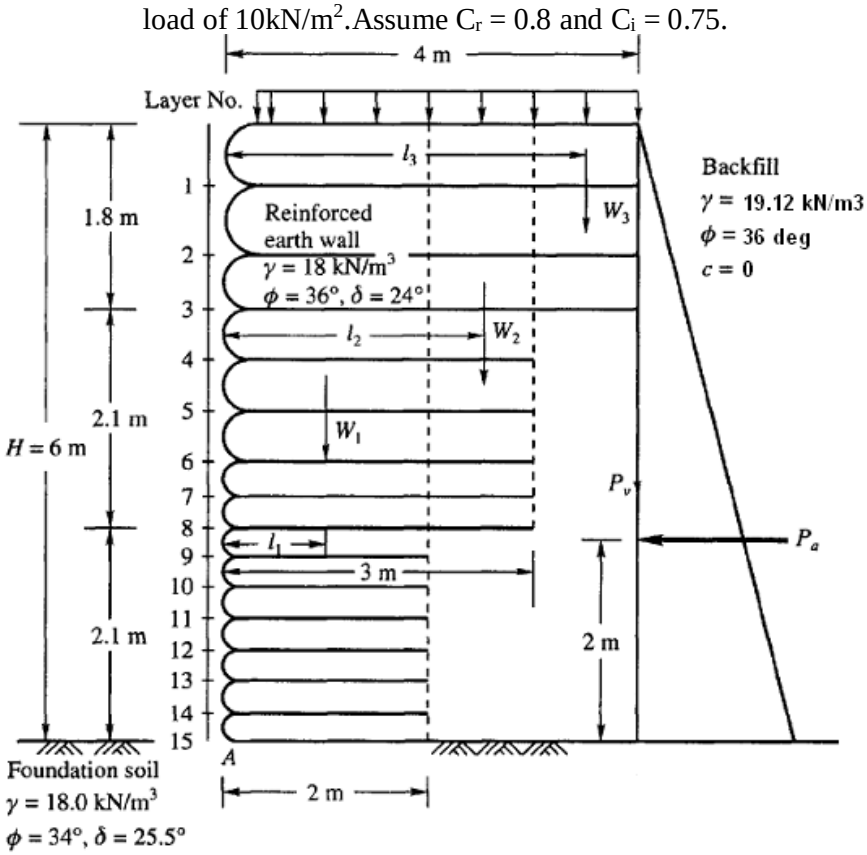

****