Seat No.: _____ Enrolment No._____

GUJARAT TECHNOLOGICAL UNIVERSITY

ME - SEMESTER–I(New course)• EXAMINATION – WINTER- 2015

Subject Code: 2710002 **Date: 31/12/2015**

Subject Name: Computational Method

Time:2:30 pm to 5:00 pm **Total Marks: 70**

Instructions:

1. **Attempt all questions.**
2. **Make suitable assumptions wherever necessary.**
3. **Figures to the right indicate full marks.**
4. **Laplace transformation table is permitted if required.**

Q.1 **(a)** The probability density function of a random variable X is as shown in table below: **05**

X	0	1	2	3	4	5	6
P(X)	k	3k	5k	7k	9k	11k	13k

(i) Find $P(X < 4)$, $P(X \geq 5)$, $P(3 < X \leq 6)$ (ii) what will be the minimum value of k so that $P(X \leq 2) > 0.3$.

(b) A successive masses of 1 Kg were hung from a wire and position of a mark (in cm) at it's lower end was measured. The data recorded are as follows: **05**

load	0	1	2	3	4	5	6	7
Position of mark	6.10	6.25	6.28	6.36	6.43	6.49	6.58	6.67

Determine the constant 'm' and 'c' for the best straight line, y = m x + c for the above observations using least square method.

(c) Using Euler's Method, solve the ODE $y' = -2x^3 + 12x^2 - 20x + 8.5$, $y(0) = 1$. Calculate y at $x = 2$ with step size = 0.4. **04**

Q.2 **(a)** (i) Using Green's theorem, evaluate $\int_C [(y - \sin x)dx + \cos x\, dy]$ where C is the plane triangle enclosed by the lines $y = 0, x = \frac{\pi}{2}$ and $y = \frac{2}{\pi}x$. **04**

(ii) if $F = 3y \cdot I - xz \cdot J + yz^2 \cdot K$ and S is the surface of the paraboliod $2z = x^2 + y^2$ bounded by $z = 2$, evaluate $\iint_S (\nabla \times F).dS$ using Stoke's theorem. **03**

(b) A body executes damped forced vibrations given by the equation: $\frac{d^2y}{dt^2} + 2n\frac{dy}{dt} + a^2 y = e^{-nt}\sin\omega t$. Solve the equation when $(i)\ \omega^2 = a^2 - n^2$ and $(ii)\ \omega^2 \neq a^2 - n^2$. **07**

OR

(b) Using the method of undetermined co-efficient for the non-homogeneous ODE , solve the initial value problem, $y'' + 2y' + 0.75y = 2\cos x - 0.25\sin x + 0.09x$, $y(0) = 2.78, y'(0) = -0.43$. **07**

Q.3 **(a)** Using Fourier analysis, find the two half range expansions of the function shown in figure:-1, $f(x)=\begin{cases}\frac{2k}{L}x & \text{if } 0<x<\frac{L}{2}\\ \frac{2k}{L}(L-x) & \text{if } \frac{L}{2}<x<L\end{cases}$. **07**

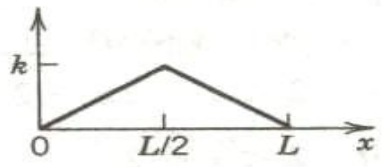

Figure :-1

(b) Solve the differential equation $\frac{d^2y}{dx^2}+4y=f(t),\ y(0)=0, y'(0)=1$ by Laplace transform, where (i) $f(t)=\begin{cases}1 & 0<t<1\\ 0 & t>1\end{cases}$ (ii) $f(t)=H(t-2)$ **07**

OR

Q.3 **(a)** Find the vibration of a rectangular membrane of sides 'a = 4 ft' and 'b = 2 ft' as shown in figure:-2. If the tension is 12.5 lb/ft, the density is 2. 5 slug/ft^2, the initial velocity is 0, and the initial displacement is $f(x,y)=0.1(4x-x^2)(2y-y^2)$ft . **07**

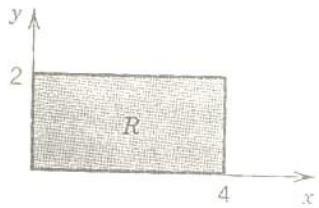

Figure:-2

(b) (i) The equation of motion of a system is $\ddot{x}+5\dot{x}+4x=3\delta(t-2)$. At $t=0,\ x(0)=2$ and $x'(0)=-2$. Determine an expression for the displacement x in terms of t using Laplace transformation. **04**

(ii) Using Laplace transformation, prove that $\int_0^\infty e^{-tx^2}dx=\frac{1}{2}\sqrt{\frac{\pi}{t}},\ t>0.$ **03**

Q.4 **(a)** The spring-mass damper system as shown in figure:-3, derive the expression for the displacement of each mass (under a steady state condition) and represent it in the form of matrix. Find the inverse of obtained matrix for the co-efficient of displacement using Gauss-Jordan Method. Take m_1= 30 Kg, m_2= 3 Kg, m_3= 2.5 Kg. Stiffness of spring = 10 Kg/S^2. **08**

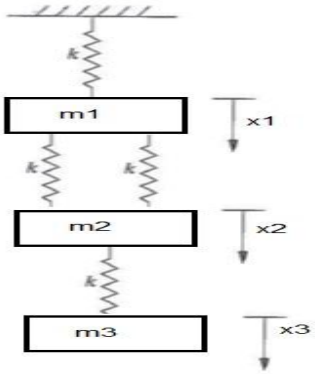

Figure :- 3

(b) Find the tridiagonal matrix using House Holder's method for the matrix $\begin{bmatrix} 5 & 1 & 3 \\ 1 & 5 & -3 \\ 3 & -3 & 1 \end{bmatrix}$. **06**

OR

Q.4 **(a)** For the spring-mass damper system as shown in figure:-3, derive the expression for the displacement of each mass and represent it in the form of matrix. Solve the obtained matrix using Cramer's rule to find the displacement of mass. Take m_1= 30 Kg, m_2= 3 Kg, m_3= 2.5 Kg. Stiffness of spring = 10 Kg/S^2. **08**

(b) Obtain the Eigen values and corresponding Eigen vector using the power method for the matrix $\begin{bmatrix} 1 & 1 & 3 \\ 1 & 1 & -3 \\ 3 & -3 & -3 \end{bmatrix}$. Start the iteration with matrices (1) $\begin{bmatrix} 1 \\ -1 \\ 1 \end{bmatrix}$ (Do the maximum possible iteration) (2) $\begin{bmatrix} 1 \\ 1 \\ 1 \end{bmatrix}$ (Do the five iteration). **06**

Q.5 **(a)** Fit the parabolic curve $K_0+K_1 X+K_2 X^2$ using least square method for the following observations. **07**

X	1	2	3	4	5
Y	1	3	4	6	5

(b) The angular displacement θ of a simple pendulum is given by equation $\frac{d^2\theta}{dt^2}+\frac{g}{l}\sin\theta=0$ where $l=0.98m,\ g=9.8m/\sec^2$. If $\theta=0$ and $\frac{d\theta}{dt}=4.472\,at\,t=0$. Using 4th order R.K. Method, find $\theta\ and\ \frac{d\theta}{dt}$ when $t=0.2\,Sec$. Take a step size = 0.2. **07**

OR

Q.5 **(a)** Find the $\log_{10} X$ as a polynomial in X by Newton's divided difference method for the data given below: **07**

X	300	304	305	307
$\log_{10} X$	2.4771	2.4829	2.4843	2.4871

Also evaluate $\log_{10} 310$.

(b) Given $\frac{\partial^2 f}{\partial x^2}-\frac{\partial f}{\partial t}=0,\ f(0,t)=f(5,t)=0,\ f(x,0)=x^2(25-x^2)$, find the values of f for $x=ih(i=0\ to\ 5)\ and\ t=jk(j=0\ to 10)$ with $h=1\ and\ k=\frac{1}{2}$ using Schmidt Method. **07**

****