Seat No.: _____ Enrolment No._____

GUJARAT TECHNOLOGICAL UNIVERSITY

ME - SEMESTER–I(New course)• EXAMINATION – WINTER- 2015

Subject Code: 2710907 **Date: 04/01/2016**

Subject Name: Advanced Engineering Dynamics

Time:2:30 pm to 5:00 pm **Total Marks: 70**

Instructions:

1. **Attempt all questions.**
2. **Make suitable assumptions wherever necessary.**
3. **Figures to the right indicate full marks.**

Q.1	**(a)**	Derive the velocity and acceleration relations for a particle moving on a curved path using (r, d) coordinate system.	**07**
	(b)	A right circular cone is defined by $x^2 + y^2 = 9z^2$, (x, y, and z have unit of millimeters). The vertical position of a block sliding along the interior of such a cone is observed to be Z = 480 ï 80t^2, and X = y^2/200. Also, y>0 throughout the motion. Determine the velocity and acceleration of the block when t = 2s.	**07**
Q.2	**(a)**	Explain the Angular momentum of Rigid bodies.	**07**
	(b)	Discuss; Eulerian Angles.	**07**
		OR	
	(b)	Collar B is pinned to arm AB as it slides over a circular angular bar. The guide bar translates to the left at a constant speed ?, such that the distance from pivot A to the center C is ?? . Derive the expression for the angular velocity of collar B. (figure:- 1).	**07**
Q.3	**(a)**	Derive the momentum and energy principles for rigid bodies.	**07**
	(b)	Derive the inertia matrix of the quarter-sphere about the xyz axes; then use that result to obtain the inertia matrix for a quarter-spherical shell whose skin thickness is << a. express each result in terms of the mass m of that body. (figure:- 2)	**07**
		OR	
Q.3	**(a)**	Derive Newton-Euler equation of motion for rigid bodies.	**07**
	(b)	A disk is rolling without slipping in an unsteady manner, such that the angle d at which the plane of the coin is inclined is not constant. Prove that the work done by the friction and normal forces is zero. (Figure : 3)	**07**
Q.4	**(a)**	Derivation of Langrageôs Equation.	**07**
	(b)	Prove that the virtual work done by the inertia forces is equal to the time rate of change of work done by the momentum minus the virtual change in kinetic energy.	**07**
		OR	
Q.4	**(a)**	Discuss the general procedural steps for Newton-Euler Equations of motion.	**07**
	(b)	Force F_1 causes the collar to translate such that its horizontal position x is known as a function of t. force F_2 is known as a function of t. Generalized coordinates are the absolute angle of rotation d_1 for the upper bar and the relative angle d_2 for the lower bar. Determine the corresponding generalized forces. The weight of each bar is negligible in comparison with the magnitude of F_2. (Figure : 4)	**07**
Q.5	**(a)**	Discuss the Lagrange equation with Constraints.	**07**
	(b)	Discuss the nonholonomic Hamilton principle with suitable example.	**07**
		OR	
Q.5	**(a)**	Definition of Generalized forces.	**07**

(b) Derive formulation with Quasi-Coordinates. **07**

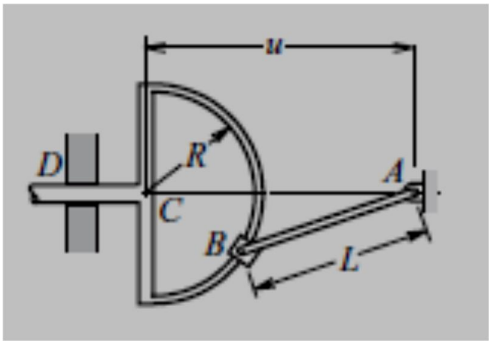

Figure : 1

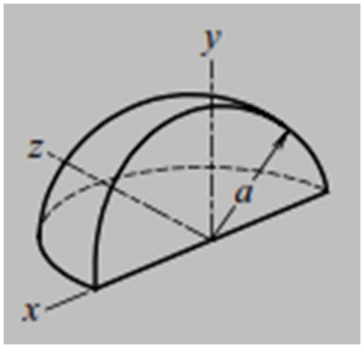

Figure :2

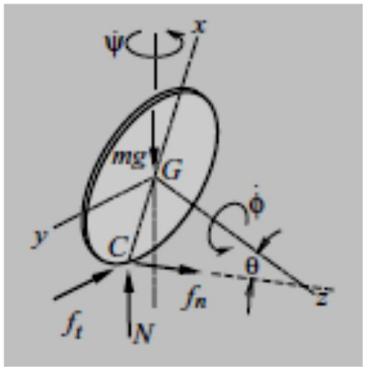

Figure :3

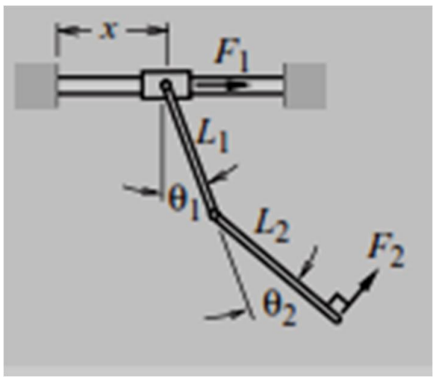

Figure :4

****