Seat No.: _____ Enrolment No._____

GUJARAT TECHNOLOGICAL UNIVERSITY

ME - SEMESTER–I(New course)• EXAMINATION – WINTER- 2015

Subject Code: 2712001 **Date: 01/01/2016**

Subject Name: Matrix Methods of Structural Analysis

Time:2:30 pm to 5:00 pm **Total Marks: 70**

Instructions:

1. **Attempt all questions.**
2. **Make suitable assumptions wherever necessary.**
3. **Figures to the right indicate full marks.**

Q.1		Analyze the beam shown in figure 1 by stiffness matrix method and plot shear force and bending moment diagram.	**14**
Q.2	**(a)**	Derive the member stiffness matrix for a beam.	**07**
	(b)	How non-linear analysis will be carried out? Explain with example.	**07**
		OR	
	(b)	Compute the load vector for the portal frame as shown in figure 2.	**07**
Q.3	**(a)**	Find the nodal unknowns at joints for the portal frame shown in figure 2 by stiffness matrix method.	**07**
	(b)	Derive the transformation matrix for portal frame.	**07**
		OR	
Q.3		Analyze the beam shown in figure 1 by flexibility matrix method and plot bending moment diagram.	**14**
Q.4		Analyze the truss shown in figure 3 by stiffness matrix method. Find the unknown joint displacement and forces in the members. Temperature in member BD is increased by 20^0 C, AE = 8000 kN and α = 12 x 10-6 ^{0}C.	**14**
		OR	
Q.4		Compute the support reactions and unknown joint displacements for the truss as shown in figure 3 by stiffness matrix method. Here joint B settles down by 4 mm downward. AE = 8000 kN.	**14**
Q.5		Analyze the portal frame as shown in figure 4 by flexibility matrix method and plot bending moment diagram.	**14**
		OR	
Q.5	**(a)**	Compute the unknown joint displacement of the grid is shown in figure 5 by any matrix method.	**14**

****

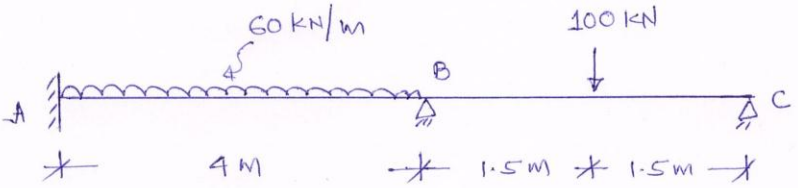

Figure 1 (Q. 1 and OR Q.3)

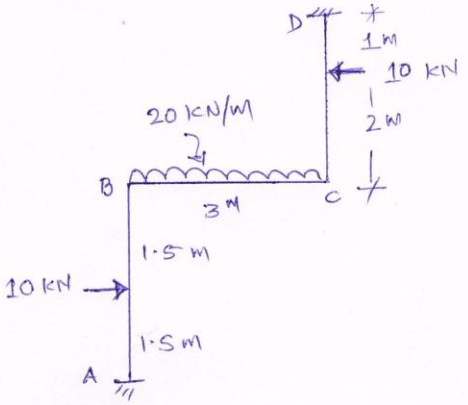

Figure 2 [OR Q.2(b) and Q.3(a)]

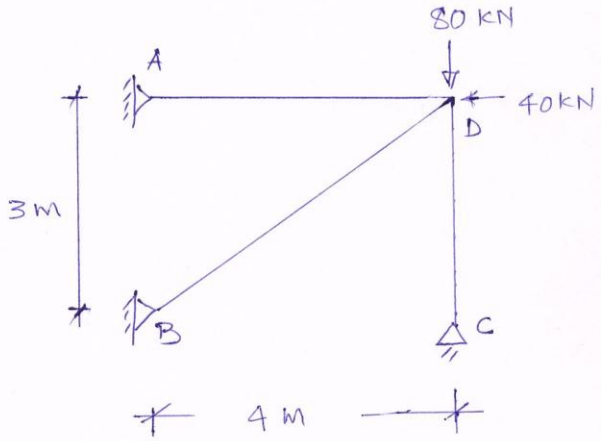

Figure 3 (Q. 4 and OR Q.4)

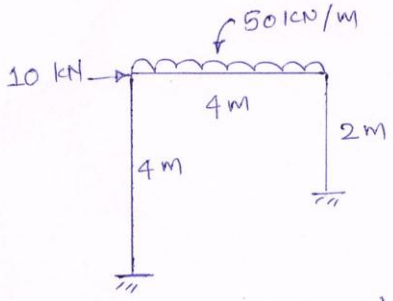

Figure 4 (Q.5)

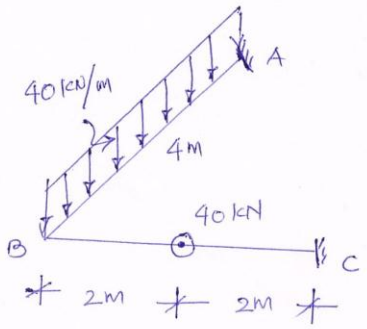

Figure 5 (OR. Q.5)