Seat No.: _____ Enrolment No._____

GUJARAT TECHNOLOGICAL UNIVERSITY

ME - SEMESTER– II(New course) • EXAMINATION (Remedial) – WINTER- 2015

Subject Code: 2720801 **Date: 09/12/2015**

Subject Name: Finite Element Methods

Time:2:30 pm to 5:00 pm **Total Marks: 70**

Instructions:

1. **Attempt all questions.**
2. **Make suitable assumptions wherever necessary.**
3. **Figures to the right indicate full marks.**

Q.1 **(a)** Discuss and Explain the Steps involved in finite element analysis. **07**

(b) Explain the weighted residual method for finite element formulation. **07**

Q.2 **(a)** Define plane stress and plane strain problem with at least two examples of each. **07**

(b) A thin Plate as shown in figure has uniform thickness of 02 cm and its modulus of elasticity is $200x10^3$ and density 7800 kg/m^3. In addition to its self weight the plate is subjected to a point load P of 500 N is applied at its midpoint. Considering two finite elements and find out (i) Global stiffness Matrix. (ii) Global Load Matrix. **07**

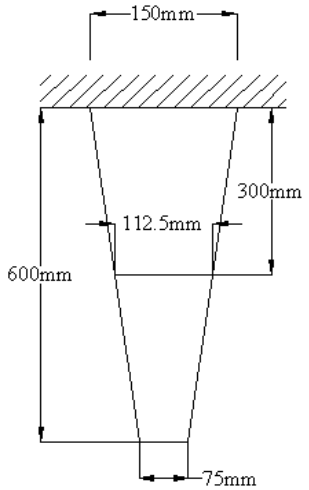

OR

(b) For the pin jointed configuration shown in figure. Determine the stiffness values K_{11}, K_{12} and K_{22} of the global stiffness matrix. Also calculate the stresses in elements and reaction at support. Take P= 1000 N. **07**

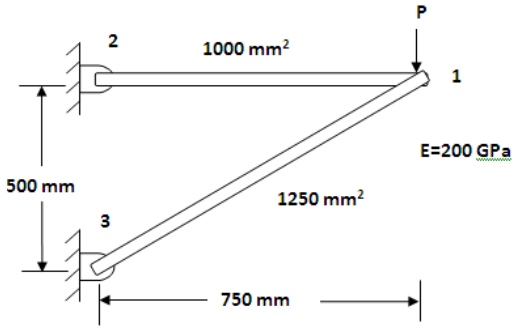

Q.3 **(a)** Explain the following elements used in FEA stating their applications. Draw their sketches showing position of nodes. **07**

(i) Plate bending elements (ii) Curved shell elements (iii) 3 D solid elements.

(b) Determine the displacements at point 3 (Figure Shown below) using Finite Element Method. All members are made of same material and are of same cross section. **07**

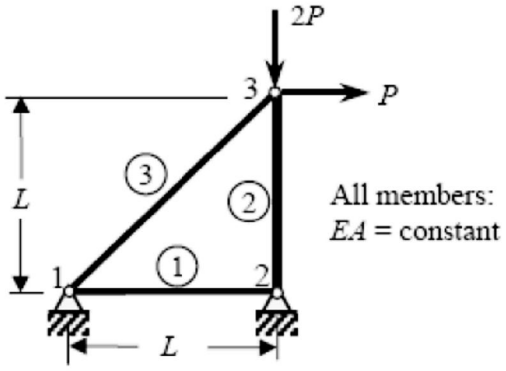

OR

Q.3 **(a)** Explain the detail discretization process with respect to the following points. **07**

(i) Types of element (ii) Size of elements (iii) Location of nodes

(iv) Numbering of element (v) Node numbering system.

(b) Consider the bar as shown in above Figure. Determine the nodal displacements, element stresses and support reactions using elimination approach. **07**

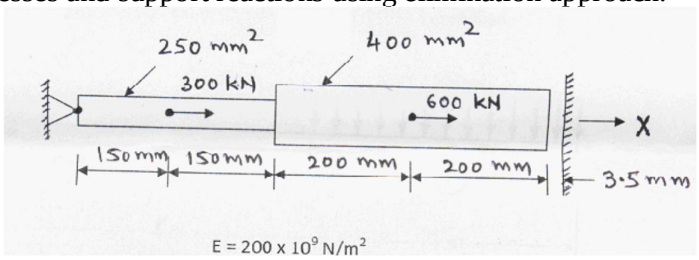

Q.4 **(a)** Write the Governing equation and boundary conditions used to completely define a rod extrusion problem. Also derive itôs weak form. **07**

(b) Derive the element stiffness matrix for plain truss in globle coordinate system. **07**

OR

Q.4 **(a)** Giving suitable example, explain Lagrangeôs method for a three degree of freedom spring mass system. Get the required equations of motion. **07**

(b) Differentiate the following **07**

(i) Transient and Eigen value problems

(ii) Completeness and compatibility of elements

Q.5 **(a)** Explain consistent mass matrix approach for dynamic analysis using finite element with illustrative example. **07**

(b) Explain the following terms with reference to a FEA software **07**

(i) Preprocessing (ii) Solution (iii) Post Processing

OR

Q.5 **(a)** Discuss the shape function for 4-node quadrilateral element and define isoparametric formulation. **07**

(b) Explain the statement ñFinite element method is an approximate methodò **07**

****