Seat No.: _____ Enrolment No._____

GUJARAT TECHNOLOGICAL UNIVERSITY

ME - SEMESTER–II(New course)• EXAMINATION (Remedial) – WINTER- 2015

Subject Code: 2720817 **Date: 11/12/2015**

Subject Name: NOISE AND VIBRATIONS ANALYSIS

Time:2:30 pm to 5:00 pm **Total Marks: 70**

Instructions:

1. **Attempt all questions.**
2. **Make suitable assumptions wherever necessary.**
3. **Figures to the right indicate full marks.**

Q.1 **(a)** Use Lagrange's method to derive the equation of motion of the simple spring–mass pendulum system of Fig. 1 and compute the system's natural frequency. **07**

(b) Suppose then that the frequency of the system in Fig 2(a) is measured to be 2 rad/s and the frequency of Fig 2(b) with an added mass of 1 kg is known to be 1 rad/s. Calculate *m* and *k*. **07**

Q.2 **(a)** Consider modelling the vertical suspension system of a small car, as a single-degree-of-freedom system of the form $m\ddot{x} + c\dot{x} + kx = 0$, where *m* is the mass of the automobile and *c* and *k* are the equivalent damping and stiffness of the four-shock-absorber–spring systems. The car deflects the suspension system 0.05 m under its own weight. The suspension is chosen to have a damping ratio of 0.3. a) If the car has a mass of 1361 kg, calculate the equivalent damping and stiffness coefficients of the suspension system. b) If two passengers, a full tank, and luggage totaling 290 kg are in the car, how does this affect the effective damping ratio? **06**

(b) Explain following terms: logarithmic decay, damped natural frequency, critical damping, vibration isolation. **08**

OR

(b) A security camera is to be mounted on a building (Fig. 3) in an alley and will be subject to wind loads producing an applied force of $F_0\cos\omega t$, where the largest value of F_0 is measured to be 15 N. It is desired to design a mount such that the camera will experience a maximum deflection of 0.01 m when it vibrates under this load. The wind frequency is known to be 10 Hz and the camera mass is 3 kg. The mounting bracket is made of a solid piece of aluminium (E = 71 GPa), 0.02 * 0.02 m in cross section. Compute the length of the mounting bracket that will keep the vibration amplitude less than the desired 0.01 m (ignore torsional vibration and assume the initial conditions are both zero). Note that the length must be at least 0.2 m. **08**

Q.3 **(a)** Find the natural frequencies and amplitude ratios of a spring-mass system, shown in Fig 4. **07**

(b) The schematic diagram of a marine engine connected to a propeller through gears is shown in Fig. 5. The mass moments of inertia of the flywheel, engine, gear 1, gear 2, and the propeller (in kg-m^2) are 9000, 1000, 250, 150, and 2000, respectively. Find the natural frequencies of the system in torsional vibration. Assume flywheel to be fixed to reduce system to 2 DOF system. Take steel shear modulus as 80 GPa. **07**

OR

Q.3 **(a)** Determine the pitch and bounce frequencies of a car with the following data: **07**

Mass:	1000 kg
Radius of gyration (r):	0.9 m
Distance between front axle and C.G. (l_1):	1.0 m

Distance between rear axle and C.G. (l_2): 1.5 m
Front spring stiffness (k_f) = 18 kN/m
Rear spring stiffness (k_r) = 22 kN/m

(b) For the system shown in Fig 4, find initial conditions so as to make it vibrate with in the first mode. **07**

Q.4 (a) Derive the flexibility matrix of the weightless beam shown in Fig 6. The beam is simply supported at both ends, and the three masses are placed at equal intervals. Assume the beam to be uniform with stiffness *EI*. **07**

(b) Discuss working principle of instrument for sound intensity measurement. **07**

OR

Q.4 (a) Derive the wave equation for free vibrations of a string. **07**

(b) Derive equation of motion for the longitudinal vibrations of a solid rod. **07**

Q.5 (a) Give the mathematical forms of following boundary conditions on the vibrations of beam. Also discuss the effect of the same. (1) Free end (2) Simply supported end (3) Fixed end. **07**

(b) An exhaust fan, rotating at 1000 rpm, is to be supported by four springs, each having a stiffness of *K*. If only 10 percent of the unbalanced force of the fan is to be transmitted to the base, what should be the value of *K*? Assume the mass of the exhaust fan to be 40 kg. **07**

OR

Q.5 (a) A diesel engine, weighing 3000 N, is supported on a pedestal mount. It has been observed that the engine induces vibration into the surrounding area through its pedestal mount at an operating speed of 6000 rpm. Determine the parameters of the vibration absorber that will reduce the vibration when mounted on the pedestal. The magnitude of the exciting force is 250 N, and the amplitude of motion of the auxiliary mass is to be limited to 2 mm. **07**

(b) Discuss the techniques for noise reduction. **07**

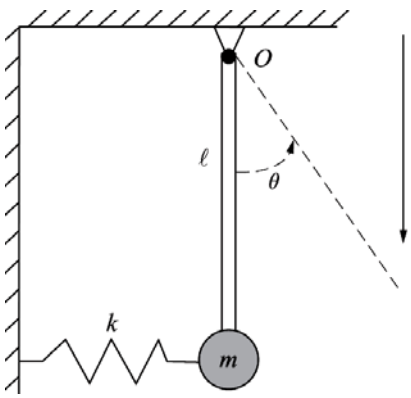

Fig. 1

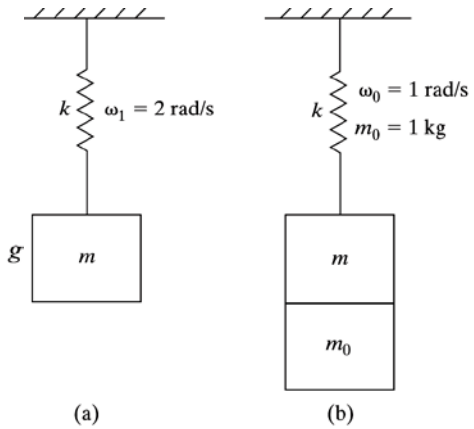

Fig. 2

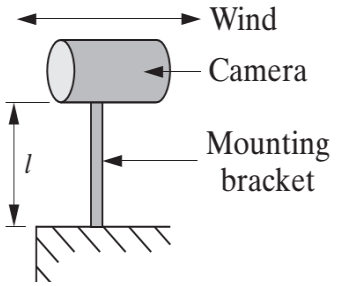

Fig. 3

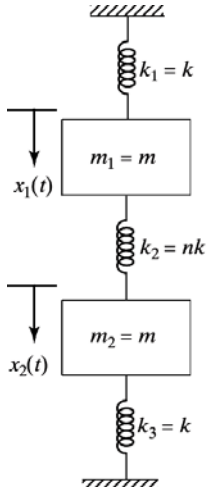

Fig. 4

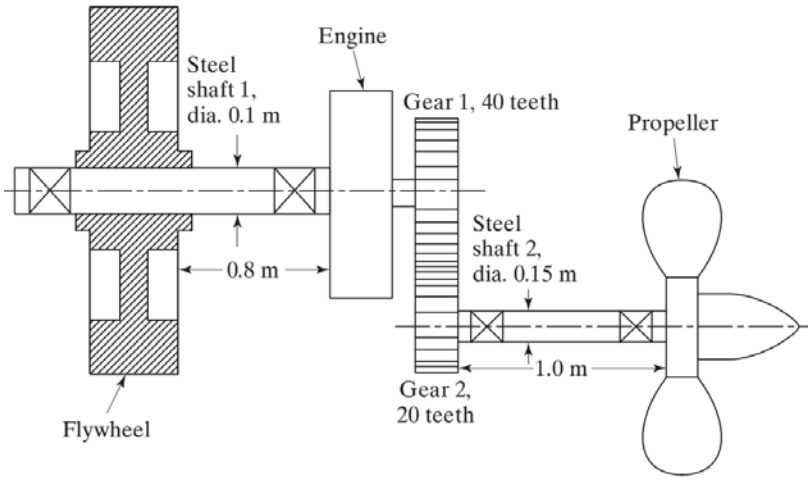

Fig. 5

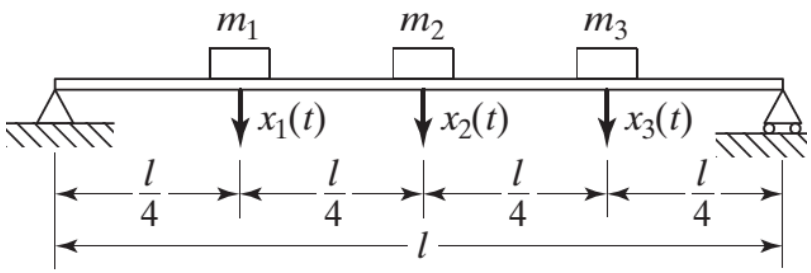

Fig. 6

****