Seat No.: _____ Enrolment No._____

GUJARAT TECHNOLOGICAL UNIVERSITY

ME - SEMESTER– II(New course) • EXAMINATION (Remedial) – WINTER- 2015

Subject Code: 2720820 **Date: 11/12/2015**

Subject Name: MultiBody Dynamics

Time:2:30 pm to 5:00 pm **Total Marks: 70**

Instructions:

1. **Attempt all questions.**
2. **Make suitable assumptions wherever necessary.**
3. **Figures to the right indicate full marks.**

Q.1 **(a)** Draw the free body diagrams and state Newton-Euler equations for a four bar mechanism when crank is subjected external moment and coupler is subjected to external force. **07**

(b) Derive the equation $A = [\mathrm{I} + \tilde{v}\sin\theta + 2(\tilde{v})^2 \sin^2 \frac{\theta}{2}]$. **07**

Q.2 **(a)** For a rigid body in space, derive an equation of generalized acceleration. **07**

(b) For a planar motion in XY plane, prove that: **07**

$$A = \begin{bmatrix} \cos\theta & -\sin\theta & 0 \\ \sin\theta & \cos\theta & 0 \\ 0 & 0 & 1 \end{bmatrix}$$

OR

(b) Fig. 1 shows two robotic arms that are connected by a cylindrical joint that allows relative translational and rotational displacements between the two links. Link 2 rotates and translates relative to link 1 along the axis of the cylindrical joint whose unit vector v defined in the link 1 coordinate system is given by $\frac{1}{\sqrt{3}}[1\ \ 1\ \ 1]$. If the axes of the coordinate systems of the two links are initially the same and if link 2 translates and rotates with respect to link 1 with a constant speed $\dot{R}^2$ =1 m/sec and constant angular velocity of ω^2 = 0.17453 rad/sec, respectively, determine the position of point P on link 2 in the first link coordinate system after time t = 3 sec, where the local position of point P is given by the vector $u = [0\ 1\ 0]^T$. **07**

Q.3 **(a)** If a vector $r = [2\ 3\ 4]^T$ is defined in a body frame of a rigid body rotating at constant angular velocity of 10 rad/sec about an axis whose unit vector is $v = \frac{1}{\sqrt{3}}[1\ \ 1\ \ 1]$, determine the angular velocity when t = 0.1 sec with respect to (1) fixed frame (2) rotating frame. **07**

(b) Derive Rodrigueôs formula in terms of Euler angles. **07**

OR

Q.3 **(a)** With a suitable example, explain following terms related to kinematic constraints: holonomic, scleronomic, rheonomic. **07**

(b) Derive equations of kinematic constraints for a pin joint and a prismatic joint. **07**

Q.4 **(a)** Draw a slider crank mechanism and explain constraint equation at each joint to ensure linear motion of slider for a given rotary motion to the crank. **07**

	(b)	Fig. 2 shows a particle of mass m that slides freely in the X_1X_2 plane on a slender massless rod that rotates with angular velocity and angular acceleration about the X_3 axis. Determine the dynamic equilibrium equations for this particle.	**07**

OR

Q.4	**(a)**	For the system shown in Fig. 3, derive the equation of motion and present the same in the matrix form.	**07**
	(b)	Explain the principle of virtual work and illustrate its application in defining connectivity conditions.	**07**
Q.5	**(a)**	For the system shown in Fig. 3, derive the equations of M^2 and M^3 using DôAlembertôs principle.	**07**
	(b)	Derive constraint Jacobian matrix for a four bar mechanism.	**07**

OR

Q.5	**(a)**	Using concept of Lagrangeôs equation of motion, for the system shown in Fig. 4, prove that $J_o^2\ddot{\theta}^2 + m^2 g\cos\theta^2 = M^2 + m^2\ddot{z}\frac{l}{2}\sin\theta^2$.	**07**
	(b)	Derive the equation of mass moment of inertia using parallel axis theorem.	**07**

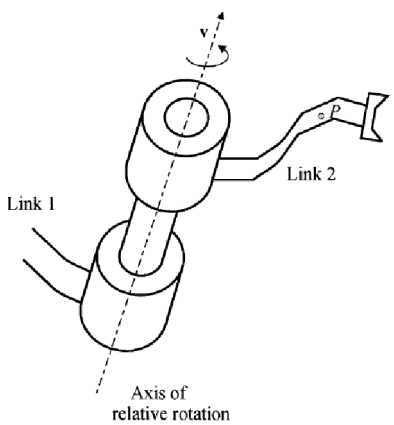

Fig. 1

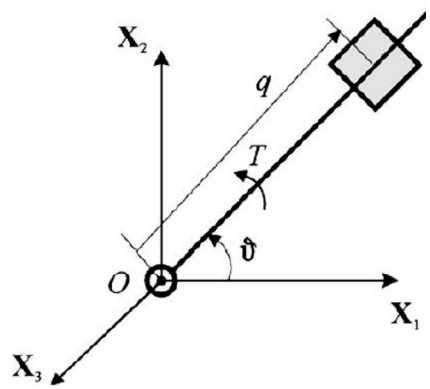

Fig. 2

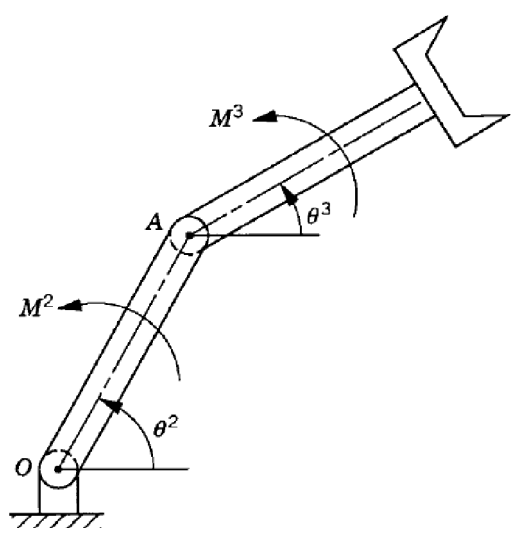

Fig. 3

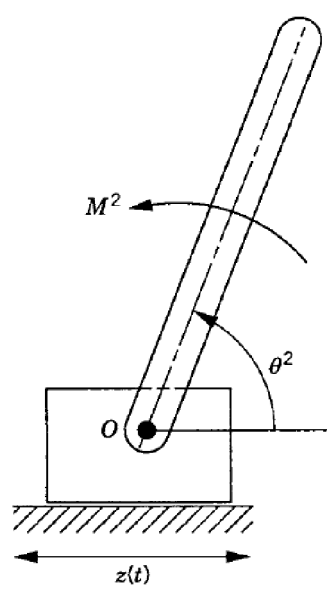

Fig. 4

****