Seat No.: _____ Enrolment No._____

GUJARAT TECHNOLOGICAL UNIVERSITY

M.E. SEMESTER III–EXAMINATION – WINTER 2015

Subject code: 2730709 **Date: 04/12/2015**

Subject Name: Modeling and Analysis of Power Converters

Time: 2:30 PM to 5:00 PM **Total Marks: 70**

Instructions:

1. **Attempt all questions.**
2. **Make suitable assumptions wherever necessary.**
3. **Figures to the right indicate full marks.**

Q.1 (a) An ideal buck converter operates in the continuous conduction mode. **07**
(i) Determine the non-linear averaged equations of this converter.
(ii) Construct a small signal ac-model.

(b) Discuss the effect of negative feedback on the network transfer functions. **07**

Q.2 (a) Using the principle of circuit averaging, obtain the DC and small signal ac averaged circuit model of the CCM SEPIC converter. **07**

(b) The boost converter shown in Fig. 1 operates in a continuous conduction mode. Obtain the control-to-output transfer function for the converter and comment on the effect of zero(s) (if any present in the transfer function) on the performance of the converter. **07**

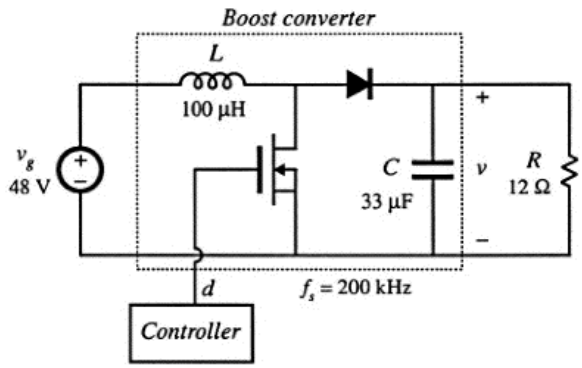

Fig.1

OR

(b) Draw the circuit representing a canonical model of a dc-dc converter operating in CCM. The averaged small-signal ac model for the boost converter is shown in Fig. 2. Obtain the various parameters of the canonical model for a buck-boost converter. **07**

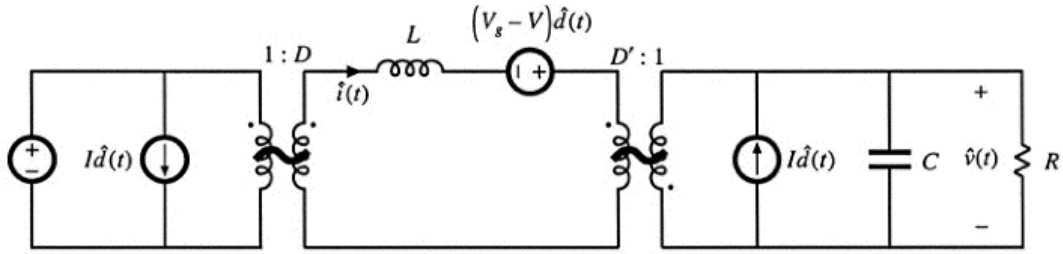

Fig.2

Q.3 (a) The boost converter shown in Fig. 1 is controlled with a closed loop control. The compensator has a gain $G_c(s) = 250/s$. **07**
Consider $H(s) = 1/24$; $v_{ref} = 5V$; $V_M = 4V$;
Obtain the loop gain T(s).

(b) Construct the magnitude and phase bode plot of the loop gain T(s) for the boost converter of Fig. 1 and parameters given in part (a) in above question. Label values of all corner frequencies and Q-factors, as appropriate. Also determine phase margin. **07**

OR

Q.3 (a) Discuss the method of graphical construction of converter transfer functions. **07**

(b) Construct the magnitude bode plot for the input and output impedance of a Boost converter shown in Fig. 1. **07**

Q.4 (a) Obtain the DC equivalent circuit for a duty-cycle controlled buck converter operating in DCM and also derive the equation for voltage gain M for DCM operation. **07**

(b) The feedback system of Fig. 3 contains a feedback loop for regulation of the main output voltage v_1. An auxiliary output produces voltage v_2. Input voltage lies in the range $280V \le v_g \le 380V$. The compensator network has transfer function **07**

$$G_c(s) = G_{c\infty}\left(1+\frac{\omega_1}{s}\right) \text{ where } G_{c\infty} = 0.05 \text{ and } f_1 = \omega / 2\pi = 400\,Hz$$

(i) What is the steady state value of the error voltage $v_e(t)$?

(ii) Determine the steady-state value of the main output voltage v_1.

(iii) Estimate the steady-state value of the auxiliary output voltage v_2.

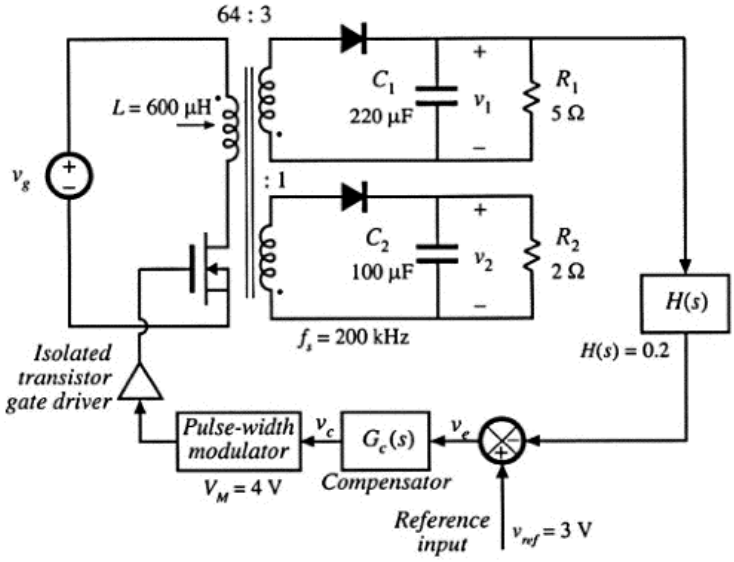

Fig. 3

OR

Q.4 (a) Obtain the small signal ac model of duty cycle controlled buck-boost converter operating in discontinuous conduction mode. **07**

(b) In the boost converter, an input filter (single-stage) is required. It must be designed such that the amplitude of switching harmonics of input current is not greater than 10μA rms. Draw the configuration of an input filter and determine the values of the components of the filter. Consider L_f=L_b and Z_o = 5Ω. **07**

Q.5 (a) Discuss the significance of an artificial ramp for current-programmed control of a converter. Also, derive the necessary condition that is required to ensure the stability. **07**

(b) State and explain Middlebrook's extra element theorem. **07**

OR

Q.5 (a) Obtain the simplified equivalent model for the current programmed control buck-boost converter operating in a continuous conduction mode. Clearly state the assumptions based on which the model is derived. **07**

(b) Critically compare the current-programmed-controlled converter operating in a continuous conduction with that operating with a voltage controlled (duty-cycle controlled) mode. Also, comment on the number of poles and zeroes (alongwith the necessary justification or analysis) for these two control approaches. **07**

****