Seat No.: _____ Enrolment No._____

GUJARAT TECHNOLOGICAL UNIVERSITY

PDDC - SEMESTER–VI. EXAMINATION – SUMMER 2016

Subject Code:X61901 **Date:11/05/2016**

Subject Name:Computer Aided Design

Time:10:30 AM TO 01:00 PM **Total Marks: 70**

Instructions:

1. **Attempt all questions.**
2. **Make suitable assumptions wherever necessary.**
3. **Figures to the right indicate full marks.**

Q.1	**(a)**	Differentiate conventional design and Computer Aided Design.	**07**
	(b)	Write a Breshnham's algorithm for the scan conversion of a line.	**07**
Q.2	**(a)**	Write a short note on wire frame models.	**07**
	(b)	A triangle ABC is represented by the vertices A (20, 20), B (40, 20) and C (30, 40). Determine the new vertex positions of the triangle if it is rotated by 30° clockwise about vertex A.	**07**
		OR	
	(b)	Discuss merits and demerits of surface modeling.	**07**
Q.3	**(a)**	Derive equation for the parametric representation of circle in computer graphics.	**07**
	(b)	Calculate five points on the two dimensional Hermite cubic spline that connects points P_0 (2, 3) and P_1 (10, 1) corresponding tangents are P'_0 (6, 3) and P'_1 (2, -5).	**07**
		OR	
Q.3	**(a)**	Write short note on Constructive Solid Geometry.	**07**
	(b)	Describe the common facilities available in solid modeling software.	**07**
Q.4	**(a)**	Explain IGES format for data exchange.	**07**
	(b)	Give characteristics of global stiffness matrix.	**07**
		OR	
Q.4	**(a)**	Determine nodal displacements for the following spring assemblage.	**07**

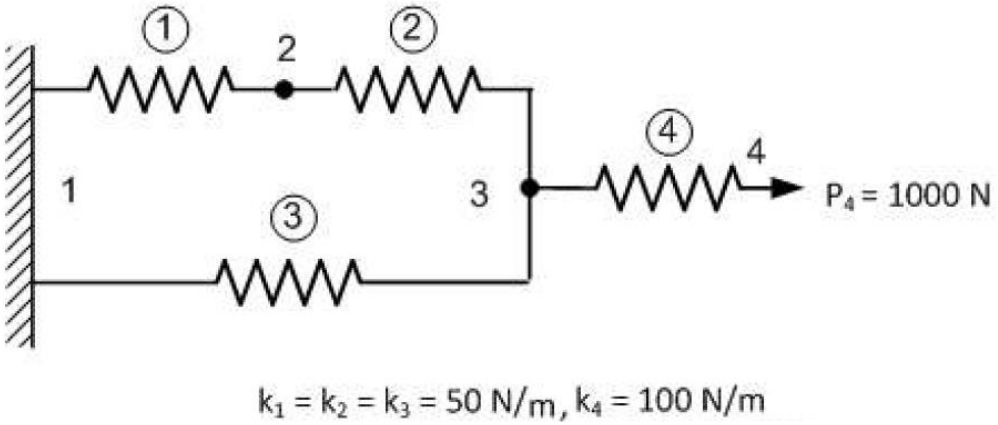

	(b)	Describe different types of elements used in FEA.	**07**
Q.5	**(a)**	Differentiate plain stress and plain strain condition.	**07**
	(b)	How Optimization problems are Classified?	**07**
		OR	

Q.5 **(a)** Design a tensile bar of length, L = 200 mm to carry a load of 5 kN for minimum cost, out of the following materials: **07**

Sr No.	Material	Mass Density (kg/m^3)	Material Cost (Rs./ N Weight)	Yield Strength (MPa)
1	Steel	7500	16	130
2	Al. Alloy	3000	32	50
3	Titanium Alloy	4800	480	90
4	Magnesium Alloy	2100	32	20

(b) Explain the graphical method of optimization with suitable example. **07**

****