Seat No.: _____ Enrolment No._____

GUJARAT TECHNOLOGICAL UNIVERSITY

PDDC - SEMESTER–VII EXAMINATION – SUMMER 2016

Subject Code:X71904 **Date:07/05/2016**

Subject Name: Control Engineering

Time:02:30 PM to 05:00 PM **Total Marks: 70**

Instructions:

1. **Attempt all questions.**
2. **Make suitable assumptions wherever necessary.**
3. **Figures to the right indicate full marks.**

Q.1	**(a)**	Explain input and output for the Washing machine. Is it an open loop or closed loop control system? Justify your answer and also explain Requirements of good control system.	**07**
	(b)	What do you mean by control system? Distinguish between open loop control system and closed loop control system. Also write down the advantages and disadvantages of close open loop control system.	**07**
Q.2	(a)	Compare Block diagram reduction and signal flow graph and also explain Mason ‘s gain formula.	**07**
	(b)	Reduce block diagram as shown in Figure 1 and obtain overall transfer function.	**07**
		OR	
	(b)	What is SFG? Find out overall transfer function using Mason’s gain formula For Figure 2.	**07**
Q.3	(a)	Obtain the transient response of first order system subjected to impulse input. Also draw the response curve of the same explaining the terms involved.	**07**
	(b)	Explain need for standard Test signals and also explain types of standard test Signals.	**07**
		OR	
Q.3	(a)	Explain Derivation of steady state error in details.	**07**
	(b)	Explain transient response (time domain) specification with suitable diagram.	**07**
Q.4	(a)	What do you mean by the stability of the system? Explain stable, unstable, absolutely and conditionally stable.	**07**
	(b)	Using Routh criterion, Discuss about the stability for the system having whose characteristic equation is given as $s^5 + s^4 + 2s^3 + 2s^2 + 3s + 5 = 0$.	**07**
		OR	
Q.4	(a)	Describe the working of an armature controlled DC motor and derive its transfer function	**07**
	(b)	Draw and explain detail block diagram of fuzzy logic controller.	**07**
Q.5	(a)	What is a programmable logic controller (PLC)? Explain the working of PLC showing the block diagram.	**07**
	(b)	What are the basic components of a pneumatic system? Explain any three of them.	**07**
		OR	
Q.5	(a)	Explain four way and pilot valves.	**07**
	(b)	Explain Control mechanisms for liquid level system.	**07**

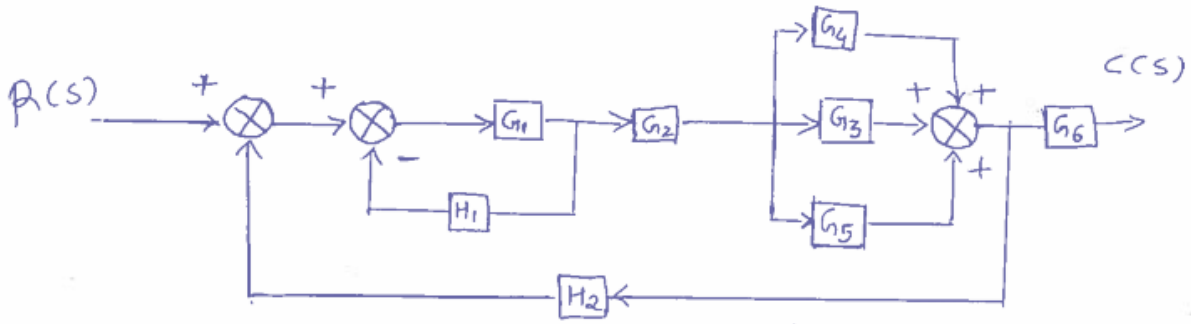

figure No. 1 Q.2 (b)

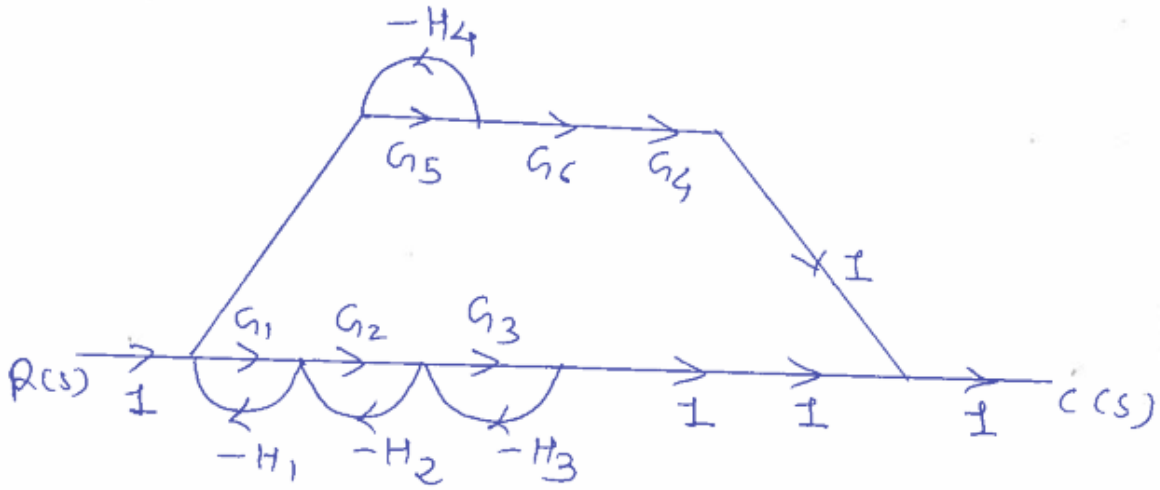

figure No. 2 Q.2 (b) (OR)