Seat No.: _____ Enrolment No._____

# GUJARAT TECHNOLOGICAL UNIVERSITY

**PDDC - SEMESTER–VII EXAMINATION – WINTER 2015**

**Subject Code:X71904** **Date:07/12/2015**

**Subject Name: Control Engineering**

**Time: 10:30pm to 1:00pm** **Total Marks: 70**

**Instructions:**

1. **Attempt all questions.**
2. **Make suitable assumptions wherever necessary.**
3. **Figures to the right indicate full marks.**

| | | | |
|---|---|---|---|
| **Q.1** | **(a)** | Explain about control engineering. Differentiate open loop and closed loop systems | **07** |
| | **(b)** | For figure 1find transfer Solve the block diagram shown function. | **07** |
| **Q.2** | **(a)** | For figure 2 find transfer function . Solve using masons rule. | **07** |
| | **(b)** | What is a signal flow graph? What are the properties of signal flow graph? State and explain Mason's gain formula for signal flow graph. | **07** |
| | | **OR** | |
| | **(b)** | Obtain a system equation for the mechanical system shown in Figure 3. Also Derive the transfer function of the system. | **07** |
| **Q.3** | **(a)** | Obtain a system equation for the mechanical system shown in Figure 4. Also derive the transfer function of the system. | **07** |
| | **(b)** | Draw and explain detail block diagram of fuzzy logic controller. | **07** |
| | | **OR** | |
| **Q.3** | **(a)** | Draw schematic block diagram for control of D.C. motor and derive its transfer function | **07** |
| | **(b)** | Discuss about force distance type pneumatic proportional controllers. | **07** |
| **Q.4** | **(a)** | Define. Rise time, Delay time, Peak time, Maximum overshoot, Steady state error | **07** |
| | **(b)** | The overall transfer function of a control system is given by $c(s)/r(s) = 25/ (S^2 + 4S + 15)$ Determine the rise time, peak time, maximum overshoot and steady state error. | **07** |
| | | **OR** | |
| **Q.4** | **(a)** | Obtain the transient response of first order system subjected to unity step input. Also draw the response curve of the same explaining the terms involved. | **07** |
| | **(b)** | Explain about the transient and steady state response of the system. Also list out the standard test signals and explain any two of them. | **07** |
| **Q.5** | **(a)** | What do you mean by the stability of the system? With suitable example, explain | **07** |

any one of the stability criterion.

**(b)** Using Routh criterion, discuss about the stability for the system having whose Characteristic equation is given as ($S^6 + 4S^5 + 6S^3 + 7S^2 + 15$). **07**

**OR**

**Q.5** **(a)** What is a programmable logic controller? Write down industrial applications of a Programmable logic controller. **07**

**(b)** Distinguish between hydraulic and pneumatic control systems. State the various Components of any hydraulic circuits. Name the various types of hydraulic pumps Commonly used in industries. **07**

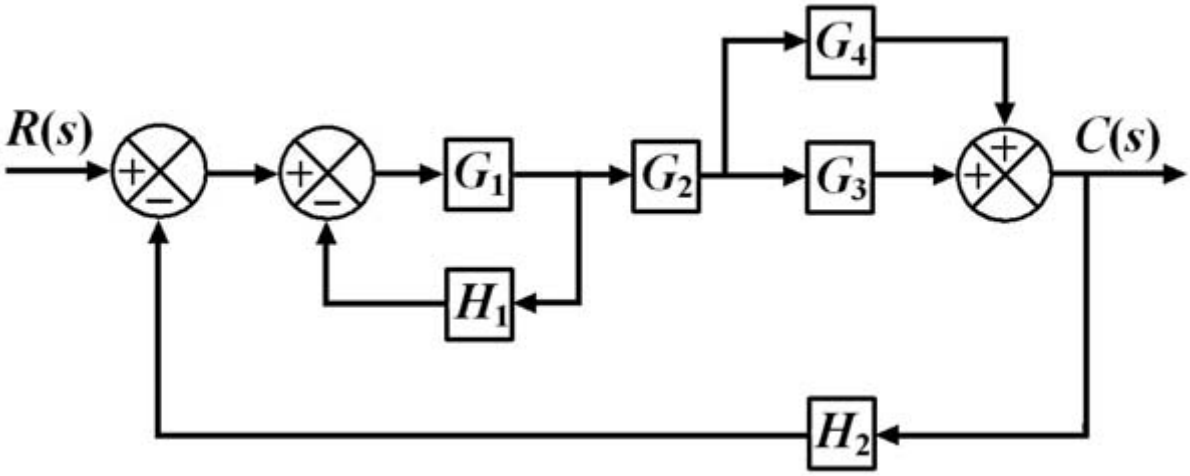


**Figure 1.**

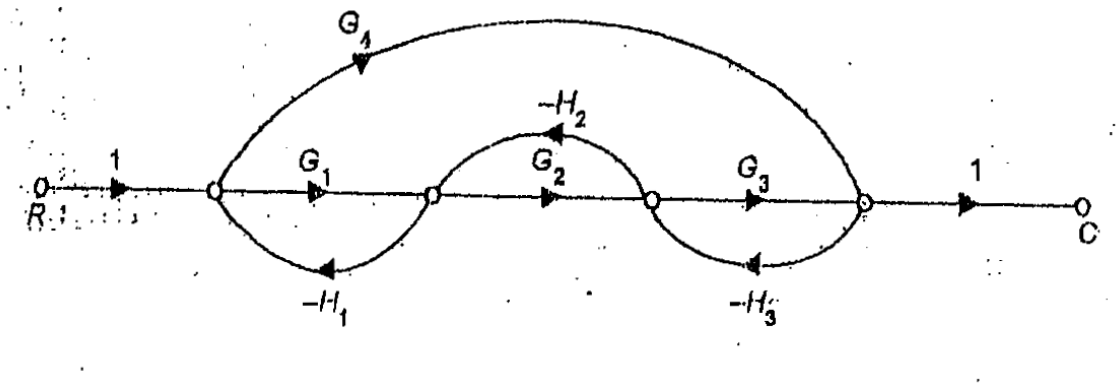


**Figure 2.**

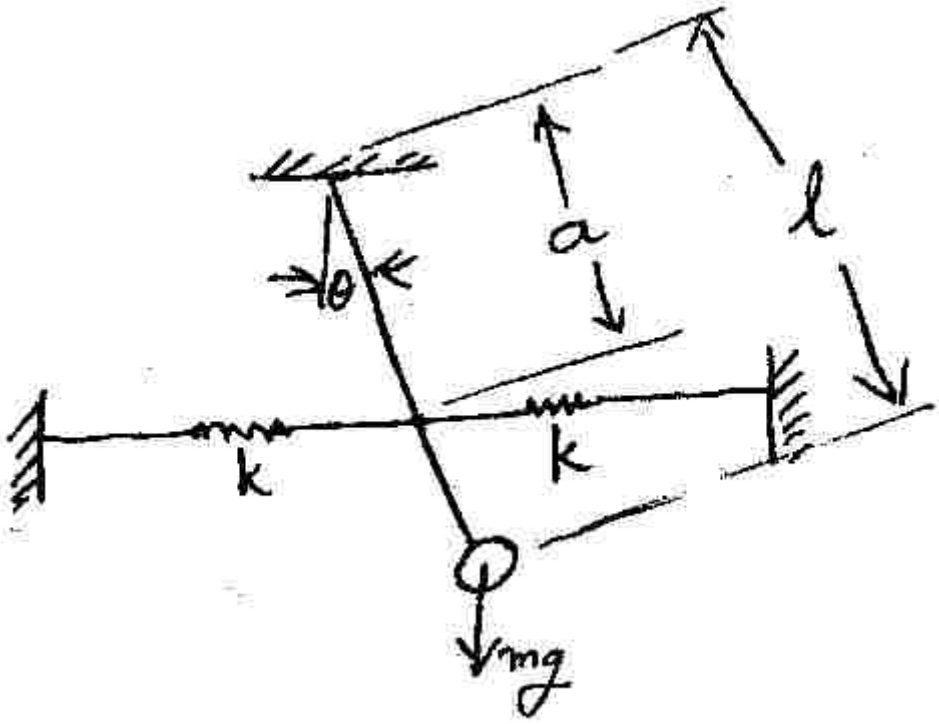


**Figure 3.**

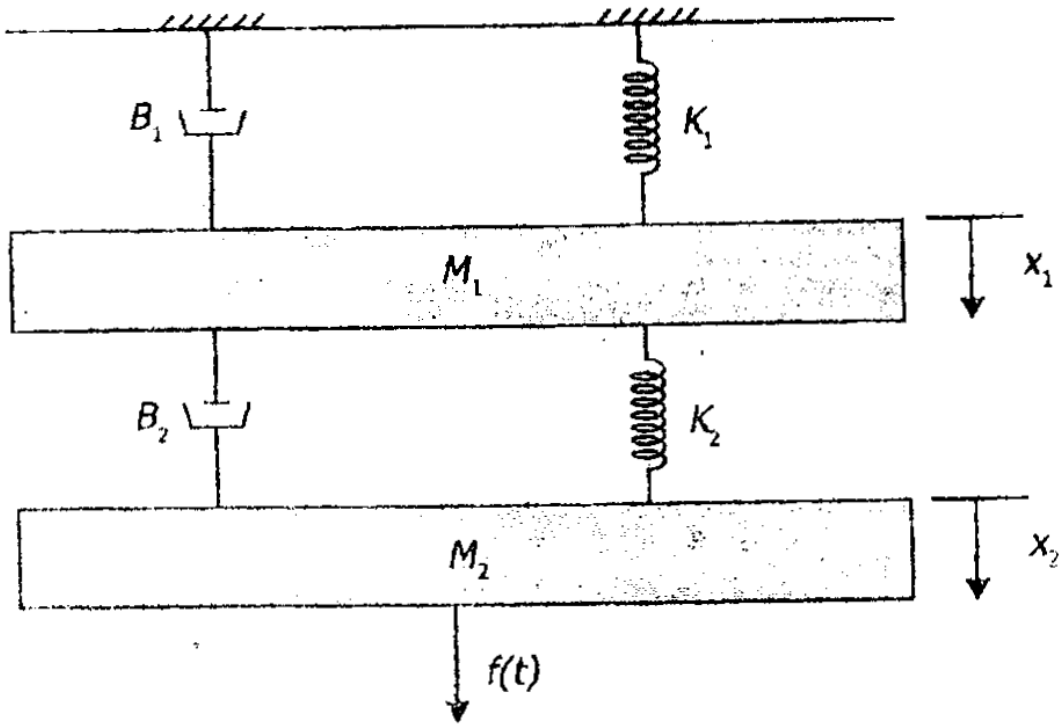


**Figure 4.**